MAJOR

Operators Manual & Parts List

CYCLONE
HEAVY DUTY MOWER

MJ30-920

CYCLONE

Head Office
Major Equipment Intl. Ltd.
Ballyhaunis,
Co. Mayo,
Ireland.

Tel.: +353 (0) 9496 30572
Fax: +353 (0) 9496 30788
Email: info@major-equipment.com

UK Office
Major Equipment Ltd.
Major Industrial Estate,
Middleton Rd.,
Heysham,
Lancs.
LA3 3JJ

Tel.: +44 (0) 1524 850 501
Fax: +44 (0) 1524 850 502
Email: ukinfo@major-equipment.com

NETHERLANDS & GERMANY OFFICE
Major Equipment Intl. Ltd.
Postbus 29,
NL-7700 AA ,
Dedemsvaart,
Nederland.

Tel: +31 (0) 6389 19585
Email: euinfo@major-equipment.com

Web: www.major-equipment.com

Find us on FACEBOOK
MAJOR MACHINERY

View our channel
MAJOREQUIPMENT

Disclaimer
While every effort has been made in the production of this manual to ensure that the information contained herein is full and correct, Major assumes no responsibility for errors or omissions.

Major reserves the right to modify the machinery and the technical data contained within the manual without prior notice.

Further to this, Major assumes no liability for any damages which may result from the use of the information contained within this manual.

Contents

Introduction

Thank you 1
Safety Aspects 1
Intended use 1
Register Your Product and Warranty Online 1
Tractor Requirements 2

Safety

Hazards associated with operating Grass Cutting Machinery 2
Operating Safely 3
Workstation 4
Regulations for use of the transmission 4
PTO Shaft Safety 4
Driving Safely on Public Roads 5
Inspections before Use 6
Starting Regulations 6

Product Identification

Machine Serial Numbers 7
Product Specifications 7
EEC certificate of conformity for machines 8
Machine Safety Labels 9
Key to Main Parts 10
Blade Rotation 11
Blade system 12
Drive-line gearboxes 12

Operating the Machine

Attaching machine to the Tractor 13
Transport Position 14
Operating the Machine/Mowing 15
Additional adjustments 16
Roller and skid setup 16
Castor wheel 17

Maintenance

Machine storage 18
PTO Shaft Maintenance 18
Transmission Bolts 19
Roller 19
Replacement of wear parts 19
Clearing out a blockage 19
Wing shafts alignment 19
Troubleshooting 20
Lubrication schedule 22
Spinning Undersole Disk *(if applicable)* 22

Spare Parts - CYCLONE

MJ30-920 Overview 23
MJ30-920 Body Assembly 24
MJ30-920 Wlng Assembly 28
Front Guards assembly MJ30-920 31

MJ30-920 Hydraulics (CYC-920-HYD01) 33

Cyclone double implement wing kit (CYC-RDW-WGKIT10) 34
Cyclone implement wheel assembly (CYC-RDW-01) 34
Cyclone double implement wing kit (CYC-RDW-WGKIT11) 35
Cyclone implement wheel assembly (CYC-RDW-01H) 35

MJ30-920 Blade assemblies 36
Spinning Undersole Disk Assembly (USD-GA1) 38

PTO Shaft (607393) 39

T301B (301.058) (1.35) (SHORT) 40
LF140T/1 (140.886) (140.881) (1) 41

Introduction

Thank you

We appreciate having you as a customer and wish you many years of safe and satisfied use of your machine.

Safety Aspects

This manual is an important part of your machine and should remain with the machine when you buy it. Reading your operator's manual will help you and others avoid personal injury or damage to the machine. Information given in this manual will provide the operator with the safest and most effective use of the machine. Only competent and skilled persons who have fully read and understood this operator's manual are allowed to operate this machine.

Sections in your operator's manual are placed in a specific order to help you understand all the safety messages so you can operate this machine safely. You can also use this manual to answer any specific operating or servicing questions.

Your manual contains special messages to bring attention to potential safety concerns, machine damage as well as helpful operating and servicing information. Please read all the information carefully to avoid injury and machine damage. Should any questions arise regarding the information given in this booklet, please contact your local MAJOR dealer or MAJOR.

The operator is solely responsible for the safe use and maintenance of the machine. The machine must only be operated by a competent and skilled person. Setting up and adjustment must only be carried by the operator. Do not let a third party person to adjust or modify the machine in any way.

Intended use

This machine is a grass cutting machine and designed for cutting grass. Moreover, it must only be used with a suitable tractor (see "Product Specifications" section of this booklet) and driven by an adequate drive-line of the tractor PTO. All other use is strictly prohibited. Major will not be held responsible for any loss or damage caused due to a misuse of the machine.

Register Your Product and Warranty Online

To register your product through the Internet, simply go to the Support section on www.major-equipment.com. Completing the information, either online or with the product warranty card, will ensure the customer that their product receives all post sales service and important product information.

This machine is warranted for 12 months. No warranty is given where the machine is being used as a hire machine. Warranty is against faulty workmanship or parts.

Warranty covers parts only. All parts must be returned to the manufacturer. No warranty can be considered unless parts are returned. All replacement parts will be supplied on a chargeable basis until warranty has been accepted.

Tractor Requirements

Attaching the machine to the tractor will influence the stability and manoeuvrability of the tractor. Please consult your tractor manual for limitations on weight and towing ability of the tractor.

It is the operator's responsibility to ensure that the tractor is suitable for the machine. Always consult your tractor's manual for any further information required.

Recommended Horse Power requirements for the particular models are provided in the "Product Specification" section of this booklet. Using excessive power can affect the quality of cut and/or may damage the machine.

Tractors which are not suitable for the operation can sustain damage due to the weight and power requirements of the machine. Always observe the weight of machine provided in the "Product Specification" section of this booklet, compare this with the guidelines from the tractor manual and ensure that the tractor can lift the machine safely.

The machine is designed to be attached by means of a 3 point linkage connection or can be trailed (specific models). The position of the machine can be adjusted by manual or hydraulic top link.

Winged models require at least one hydraulic spool with 1/2" female quick release connection for a single acting ram/ rams.

Road light kit requires a 12V 7 pin socket.

Safety

The operator's manual also explains any potential safety hazards whenever necessary in special safety messages that are identified with the word, CAUTION, and the safety-alert symbol .

Hazards associated with operating Grass Cutting Machinery

Shear Hazard
Shear hazards are created when the edges of two objects move toward or next to each other closely enough to cut relatively soft material. This can include the parts of the machine under hydraulic control when operating from transport to mowing position. Note, the wing units are designed to float independently of the centre deck & are free to move within operating limits.

Crush Hazard
Bystanders can be injured when machine is lowered into mowing position. Winged machines have crush points around the hinge areas & between the wing & main body. Always use transport locking bars when not in use (winged models only).

Rotating Blade Hazard
All persons are at risk if they place their hands or feet under the machine when it is raised from the ground when the blades are in motion.

Pinch Hazard
Pinch points are created when two objects move together, with at least one of them moving in a circle. This hazard is common in power transmission devices such as Belt Drives, Gear Drives & Rollers. Ensure all guarding is present.

Wrap Hazard
Any exposed, rotating machine component is a potential wrap point. Injuries usually occur when loose clothing or long hair catch on and wrap around rotating parts such as PTO shafts or Drive shafts on the machine. Ensure all guarding is present.

Free-wheeling parts Hazard
The heavier a revolving part is, the longer it will continue to rotate after power is shut off. This characteristic is called 'free-wheeling.' Blades, and various other components, drive shafts etc., will continue to move after power is shut off - often for several minutes. Injuries occur when:

- Operators shut off equipment, and attempt to clean or adjust a machine before components have completely stopped moving.
- Shear bolt protection device in PTO shaft shears & the mowing parts are still spinning but the primary PTO shaft is stationary. Operator awareness is the key to safety around freewheeling parts. Never raise the machine while the blades are still rotating.

Thrown objects Hazard
Machines throw material as a natural part of doing their job. Foreign objects, such as stones, sticks and other debris, may be taken into this equipment and expelled at tremendous speed. These objects are contained by the sides of the machine and by the rear/front rollers / guards / chain guards / rubber skirts depending on model of your machine.
Ensure bystanders are clear from the machine & cannot be hit with debris expelled from the machine. Bystanders or animals in the path of thrown objects could be seriously injured. Never operate machine with decks raised from the ground as this makes the front/rear protection redundant.

Hydraulic Hazard (if applicable)
Hydraulic systems store considerable energy. Careless servicing, adjustment, or replacement of parts can result in serious injury. High pressure blasts of hydraulic oil can injure eyes or other body parts. The following precautions are crucial:

- Make certain the hydraulic pump is turned off.
- Lower attached equipment to the ground.
- Confirm that load pressure is off the system.

A pinhole leak in an hydraulic hose is a serious hazard. A leak may not be visible, and the only sign may be a few drops of fluid. Never inspect hydraulic hoses with your hands, because a fine jet of hydraulic fluid can pierce the skin.

Slips, Trips and Falls Hazard
Slips and falls often result from:
1. Slippery footing on the ground
2. Cluttered steps and work platforms.

The potential for slips and falls can be greatly reduced by using good judgement and practicing good housekeeping on and around equipment.

Noise Hazard
Please note that the machine is normally used outdoors and that the position of the operator is seated in the driving seat of the tractor. It is advisable to consult the prescriptions listed in tractor operator and maintenance manuals.
The acoustic pressure at a distance of 2.6m from the centre of the machine and at a height of 2.0m, with the implement operating in a no load condition can reach 90 dBA. In a loaded condition & a PTO rate of 540 (1000) rpm the value can reach 97dBA. Higher rate of PTO input will result in in higher noise levels. Always wear hearing protection.

Operating Safely

This MAJOR machine is designed to operate at a PTO rate which is stated in the Product Specifications part of this booklet. Ensure tractor PTO output is set at a correct RPM rate. This MAJOR machine must only be used for purposes outlined in the Intended Use section of this booklet. All other use is strictly prohibited.

Users should become thoroughly familiar with the contents of this manual before using, servicing and mounting the implement to the tractor and all other pertinent operations. Never wear jewellery, loose clothing such as ties, scarves, belts, unbuttoned jackets or dungarees with open zips which could become caught up in moving parts.

Always wear approved garments complying with accident prevention provisions such as non-slip shoes, ear muffs, goggles and gauntlets. Wear a jacket with reflecting stickers if the implement is used near public highways.

Consult your retailer, the Labour Health Service or your nearest equivalent authority for the information about the current safety provisions and specific regulations with in order to ensure personal safety.

ALWAYS DISENGAGE PTO, SWITCH OFF THE TRACTOR ENGINE AND ENGAGE THE PARKING BRAKE BEFORE MAKING ADJUSTMENT TO THE MACHINE.

NEVER PLACE LIMBS UNDER THE MACHINE WHILE ROTOR(S) ARE TURNING. ROTOR(S) CAN REMAIN TURNING FOR UP TO 1 MINUTE AFTER DISENGAGING PTO.

Workstation

The operator must remain seated while working the machine. If the machine is a winged unit and the wings need to be raised/lowered the operator must not leave the tractor. Always ensure the PTO has been turned off and the parking brake applied before leaving the tractor cab or carrying out maintenance.

NEVER OPERATE THE HYDRAULICS WITH THE TRACTOR SWITCHED OFF

Regulations for use of the transmission

The transmission to the gearboxes is protected throughout the machine by both PTO shafts and bolt down covers. All guarding should be kept efficient and in good condition. If the condition is poor, the guarding should be renewed before the implement is used.

UNLESS IT IS CORRECTLY PROTECTED THE TRANSMISSION COULD CAUSE DEATH SINCE IT CAN CATCH ON PARTS OF THE BODY OR CLOTHING

Ensure retaining chains are correctly anchored on all PTO shafts, preventing them from turning. Ensure drive line can turn easily within the shield. Keep spline grooves clean and greased so that PTO shaft can connect easily. Besides being described in this booklet, the method by which the PTO shaft is connected to the tractor must be checked out with the instructions in the tractor manufacturer's manual.

PTO Shaft Safety

Maximum PTO input is specified in the Product Specifications section of this booklet. Contact your nearest dealer or a specialised retail outlet if the PTO must be replaced with a longer one, since this must belong to the same power category and possess the same characteristics. An unsuitable PTO could easily break.

The tractor PTO shaft length may be altered to suit the individual tractor model. When the machine is in operation, the PTO shaft should have a minimum 1/3 engagement as shown in the diagrams. After the machine has been hitched to the tractor, it should be checked in various positions that the drive line is the correct length. If the PTO is too short and tends to slip out of place, it must be replaced with a longer one.
If the PTO shaft is too long, it should be shortened in the following way:

- Set the machine at a minimum distance from the tractor, then brake the tractor and switch off the engine.
- Separate the two halves of the PTO. Insert the female part into the tractor PTO and the male part into the machine PTO, checking that the position is correct by means of the fixing pins.
- Line up the two halves of the PTO together, keeping them parallel.
- Using a felt tip pen, match mark the place where the two halves must be shortened as shown.
- First cut shield "1" and use part "2" as a reference to cut the splined shaft.
- Proceed in the same way for the second half.
- Trim and chamfer the two cut ends of the PTO and clean off all swarf and shavings.
- Grease the two profiles and join the two halves of the PTO together.
- Mount the PTO shaft and check that its length is correct as before.

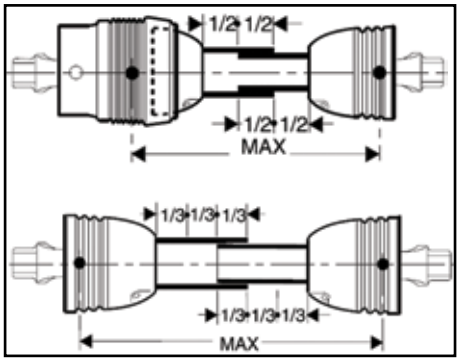

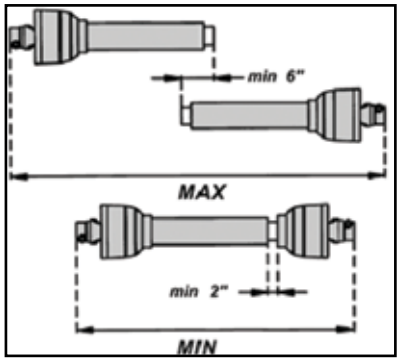

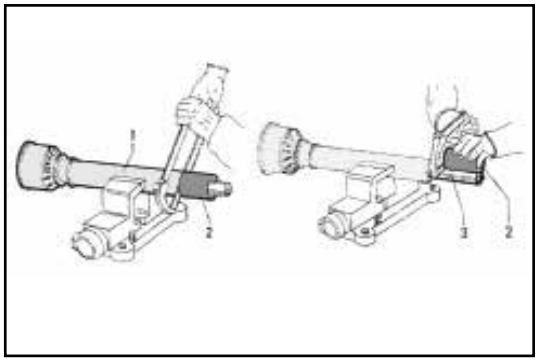

Driving Safely on Public Roads

Check the local Highway Code regulations before driving the tractor on public highways with an implement attached. Check the reflectors, hazard flashers and/or projecting load indicators are installed when required and efficient. These indicators must be installed correctly and easily seen by the drivers of other vehicles.

Bystanders must not be allowed to lean against or climb onto the machine during transport or while working. Do not allow bystanders to ride on the machine.

Maximum transport speed of the implement is limited to 25-30km/h depending on the model of the machine (observe safety labels on the machine).

General safety instructions

Precautions to be taken while working with the machine:

1. Do not operate the machine when you are tired or under the influence of alcohol or any other intoxicant;
2. Before starting mowing, make sure that the area is clear of people or animals.
3. Before starting adjusting the machine, it is mandatory to disconnect the PTO, to turn off the engine of the tractor, apply handbrake and wait for the turning parts to become still and placed on the ground.
4. It is mandatory to read all the safety requirements and the operator’s manual of the machine.
5. If you are not sure how to use the machine, please contact the manufacturer or the dealer.

Inspections before Use

Always disengage PTO, Switch off tractor engine and engage the parking brake before making adjustments to the machine.

1. With the whole machine as level as possible, check the oil level in all gearboxes. Top up if required through the oil filler plug. The correct level is at the oil level plug.
2. Grease all lubrication points as outlined in the Maintenance section of this booklet.
3. Check parts for wear.
4. Check the blade mounting bolts are tight.
5. Ensure the gearbox shaft nuts are tight and retained in place by split pin.
6. Check tightness of all nuts, bolts and pins.
7. Ensure safety guards and flaps are in place at all times where fitted. If these become worn or missing, replace them immediately with new ones.
8. Due to the corrosive nature of grass when cut, wash down the machine when finished mowing, especially when the machine is being stored for a long period of time.

Starting Regulations

Always check that any imminently dangerous conditions have been eliminated before using the machine. Ensure all guarding is present & the operator is fully aware of the operations of the machine.

Always ensure the pins lock the PTO shaft yoke ends onto the spline shafts on both the tractor and the implement. An unlocked shaft could slip out of position, causing notable mechanical damage and serious injury to both operator and bystanders.

Product Identification

Machine Serial Numbers

If you need to contact MAJOR or your MAJOR dealer for information on servicing or spare parts, always provide the product model and serial numbers. Model and Serial number can be found on the Serial Plate located on the machine.

We suggest that you record your machine details below:

Model No: _____

Serial No: _____

Date of Purchase: _____

Dealer Name: _____

Dealer Telephone: _____

Product Specifications

The machine is propelled by using a 6 spline 1-3/8” PTO shaft (provided with the machine).

Model	**MJ30-920**
Cut Width	9184mm (30’ 1 9/16”)
No. of Blades	40
No. of Rotors	10
PTO (rpm)	1000
Cutting Height	40-170mm
Weight (kg)	3100

EEC certificate of conformity for machines

(conforming to Directive 2006/42/EC)

Name of Manufacturer: Major Equipment Ltd
Address: Coolnaha, Ballyhaunis, Co. Mayo, Rep of Ireland

Tel. +353949630572
Fax +353949630788

declares in sole responsibility that the product:

Machine description and function: Rotary mower with vertical axes cutting heads which cuts grass so it can be subsequently picked up.

Model: Cyclone heavy duty mower (MJ30-920)

Type: _____ **Serial number:** _____

Technical file compiled by: Alex Kolchanov (c/o Major Equipment Ltd)

- **THE SUPPLY OF MACHINERY (SAFETY) REGULATIONS 2008.**
- **S.I. No. 299 of 2007**, Safety, Health and Welfare at Work (General Application) Regulations 2007 **(Ireland).**
- **Health & Safety at Work, etc. Act 1974 (c.37) (UK).**
- **EN ISO 14121-1: 2007** 'Safety of machinery. Principles for risk assessment'.
- **EN 745** - Agricultural Machinery - Rotary Mowers and Flail Mowers - Safety**.**
- **EN ISO 13857** - Safety of machinery: Safety distances to prevent hazard zones being reached by upper and lower limbs.

I hereby certify on behalf of Major Equipment Int. Ltd., that this machine when properly installed and operated correctly, complies with all the essential Health & Safety requirements of all legislation referred to above.

Signed: _____ Place: Coolnaha, Ballyhaunis, Co. Mayo, Rep of Ireland
Date: 26/07/2019
Name: John Murphy
Position: Managing Director

Machine Safety Labels

The machine safety labels shown in this section are placed in important areas on your machine to draw attention to potential safety hazards.

On your machine safety labels, the words DANGER, WARNING, and CAUTION are used with this safety alert symbol. DANGER identifies the most serious hazards.

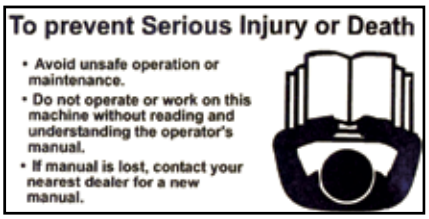

To avoid injury, read the manual

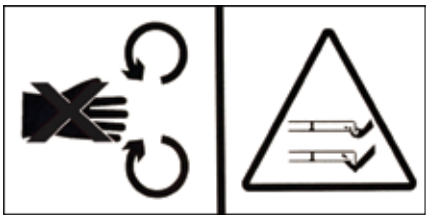

Rotating blade hazard

PTO entanglement hazard - keep clear of PTO drives.

High oil pressure hazard

Check tightness of the transmission bolts

Grease PTO tubes

Grease points

Check bolts

Moving parts

Maximum PTO input

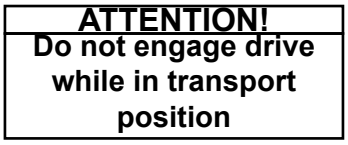

Do not engage drive while in transport position

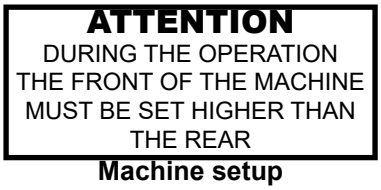

Machine setup

Check wheel nuts daily

Key to Main Parts

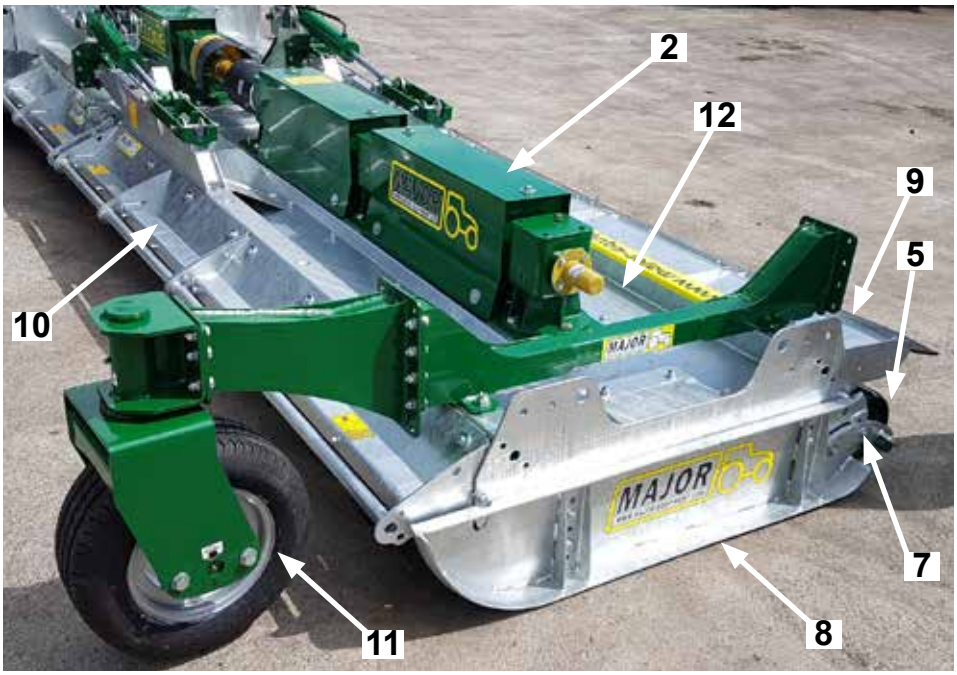

1	Body
2	Transmission cover
3	A-Frame
4	Gearbox PTO cover
5	Rear roller
6	Strap/Chain
7	Roller height indicator
8	Skid
9	Rubber skirt
10	Guards
11	Wheel
12	Wing
13	Blade

Blade Rotation

Blade rotation viewed from underside

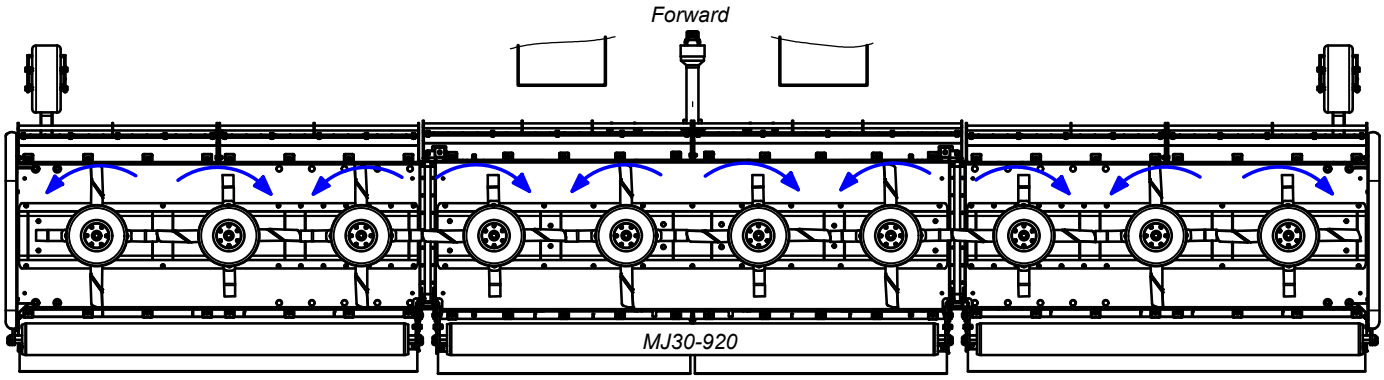

Blade system

Full breakdown of the blade assembly is provided in the Spare Parts section of this booklet

1	Blade mount	7	Blade pivot bolt
2	Gearbox output shaft	8	Blade pivot bush
3	Gearbox split pin	9	Blade
4	Blade back	10	Undersole disk
5	Blade back bolt	11	Overlap Blade
6	Blade back spacer		

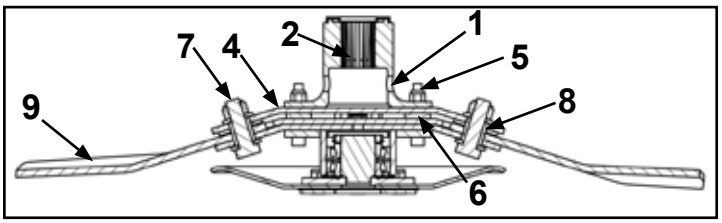

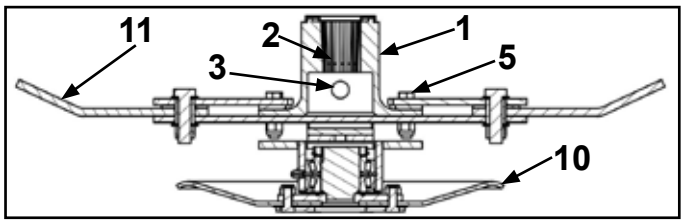

Drive-line gearboxes

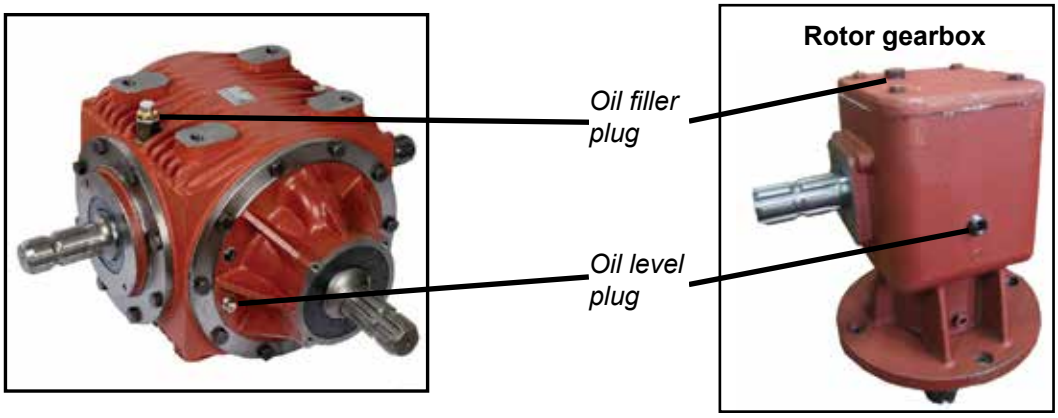

Operating the Machine

Attaching machine to the Tractor

ALWAYS OPERATE ON LEVEL GROUND WHEN HITCHING/UNHITCHING THE IMPLEMENT. THIS WILL PREVENT DANGEROUS MOVEMENT. NEVER ALLOW ANYONE TO STAND BETWEEN THE TRACTOR AND THE MACHINE.

Three Point Linkage Models

1. Adjust both lift arms of the tractor until they are level in relation to each other.
2. Hitch the lower linkage arms to the Machine and connect the top link and PTO shaft. Ensure that the locking pins are secure.
3. With the Machine lowered in its operating position, adjust the top link until the strap is slack, allowing the Machine to produce a uniform finish in varying ground conditions.
4. Check the PTO shaft for length as described previously. Connect the PTO shaft. Ensure PTO check chains are anchored to prevent PTO guarding from rotating.
5. Connect the hydraulic hoses to the appropriate connections (selected models only).

Transport Position

Before raising the machine wait until the transmission and the blades are completely still.
During the transport of the machine it is recommended that the PTO shaft is disconnected.

1. Check machine is hitched to the tractor as described. Ensure the tractor parking brake is applied
2. Ensure moving parts become still then transform the machine into transport position by hydraulic control
3. During the transport and any time the machine shall be raised, the raising device shall be adjusted to assure that the machine is at least 250mm over the ground.

Transport Position

The transport locking bars, transport pin and axle ram stopper should always be slotted into place while transporting the machine. Doing this removes pressure from the hydraulic system. Failure to use the safety equipment can cause mechanical as well as physical damage.

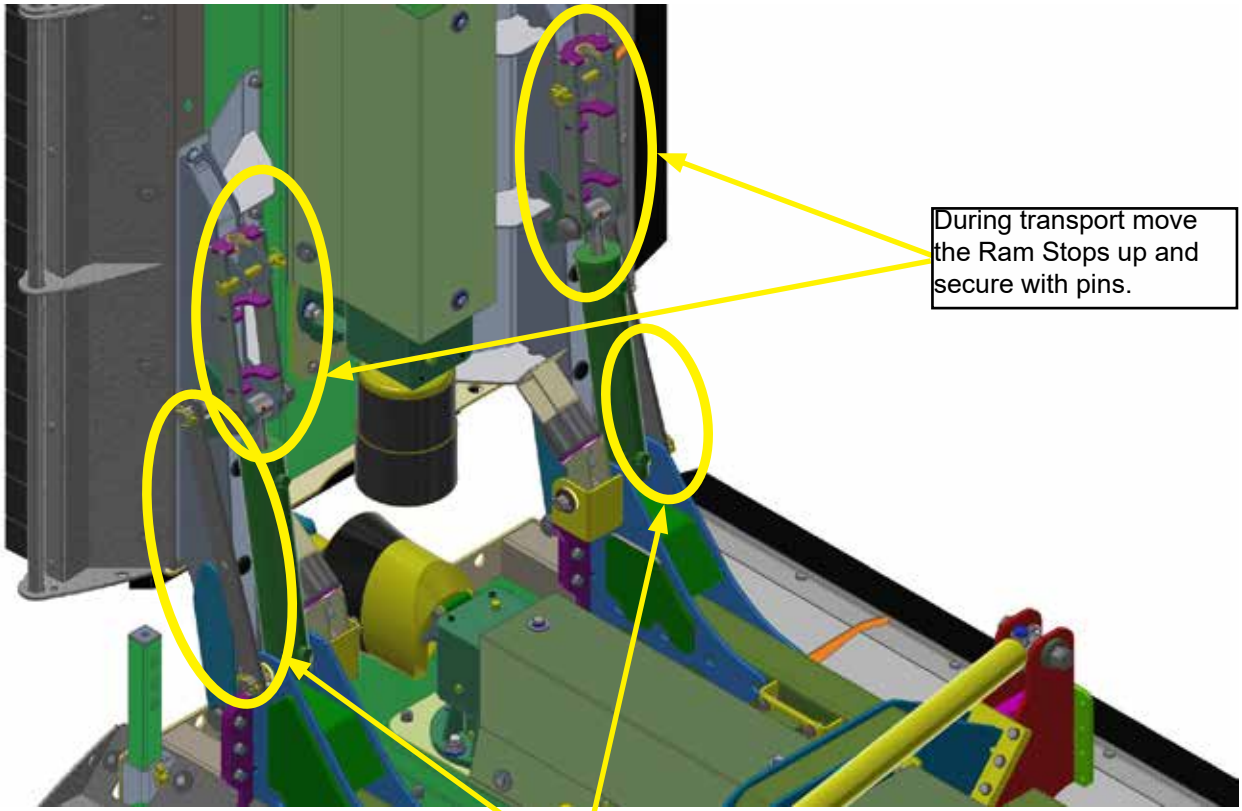

During transport move the Ram Stops up and secure with pins.

During transport make sure that the Transport Lock Bar is positioned as shown (front and back on each wing).

Operating the Machine/Mowing

Never place limbs under the machine while rotors are turning. Rotors can remain turning for up to 1 minute after disengaging PTO.

While operating this machine the PTO input rate should not exceed the RPM stated in the Product Specifications section of this booklet. Always operate on level ground when connecting/disconnecting the implement. This will prevent dangerous movement.

Never allow anyone to stand between the tractor and the machine. Ensure the machine is attached correctly to the tractor as previously described. Always start up the tractor PTO at a low RPM. Build up to operating speed, select a suitable forward gear & proceed to cut grass.

1. Hitch the machine as outlined in the previous section. Ensure bystanders are clear from the machine & cannot be hit with debris expelled from the machine.
2. The Parking Stand must be placed into mowing position
3. Check PTO shaft is fully engaged on tractor PTO splines.
4. Lower the machine by hydraulic control to the ground or use tractor linkage controls.
5. After clearing the vicinity of bystanders, relocate the Wing Transport Locking Bars. Lower the wings by hydraulic control. Ensure hydraulic ram is fully closed.
6. Start up the tractor PTO at a low RPM.
7. Build up to operating speed, select a suitable forward gear & proceed to cut grass.

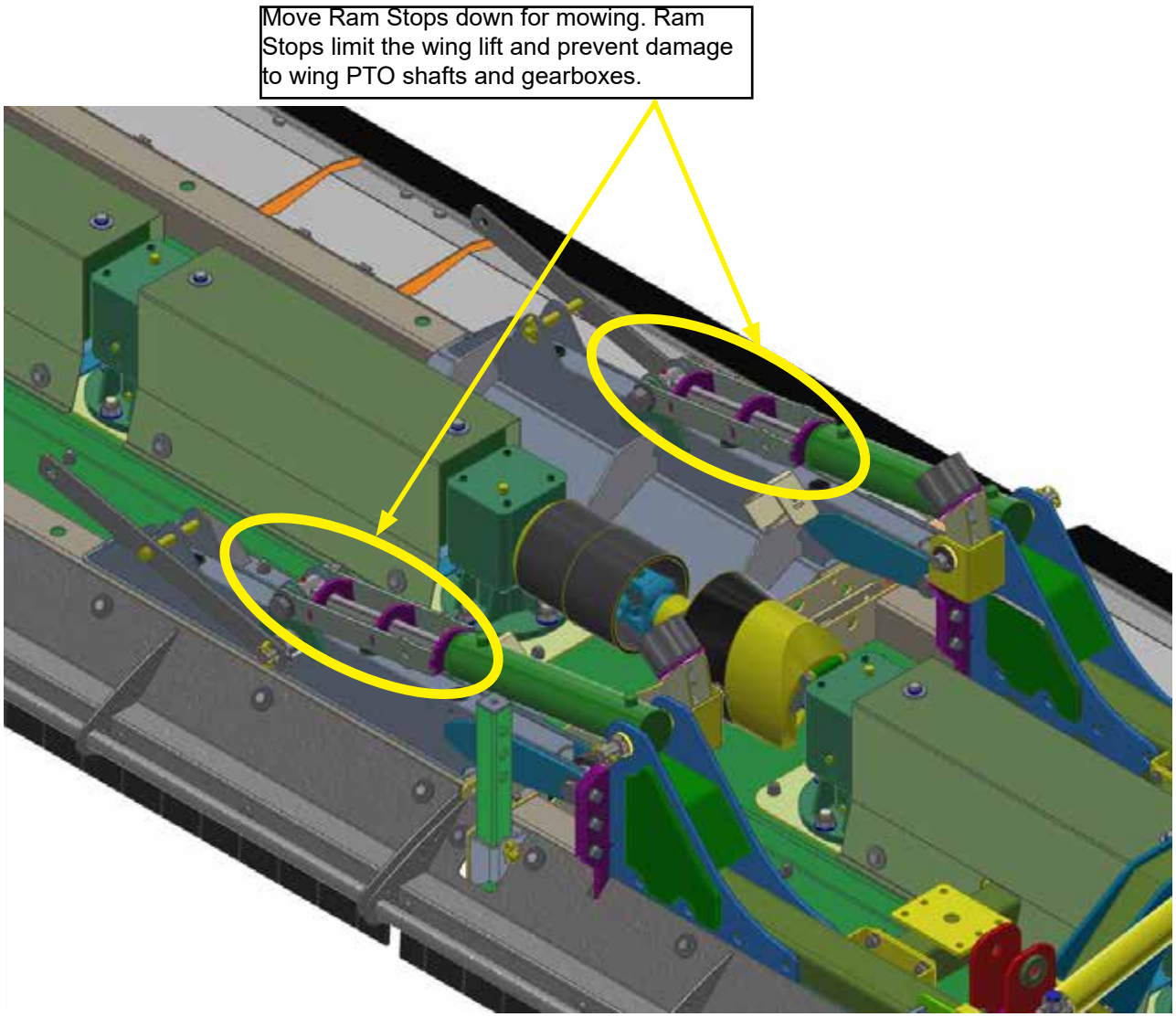

Additional adjustments

Parking stand leg must be fitted and secured with the pin before detaching machine from the tractor.

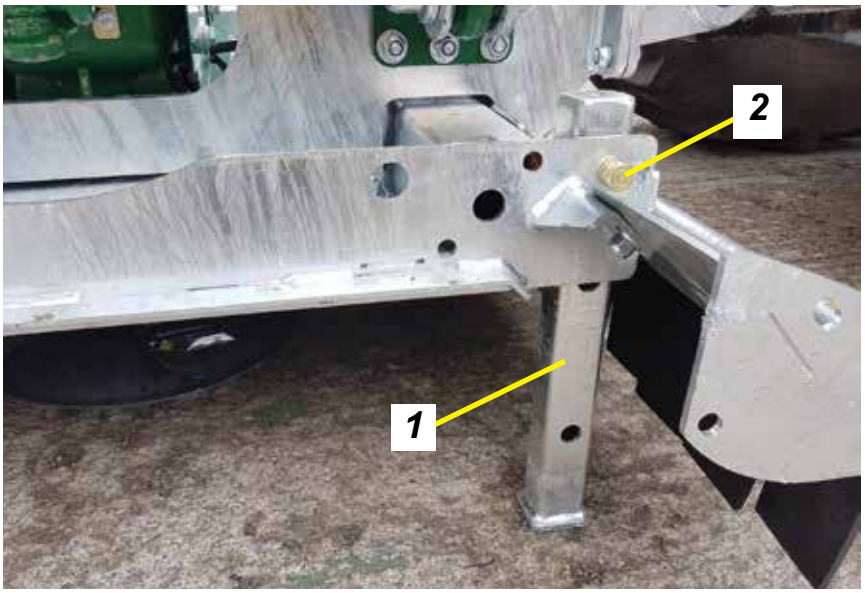

1	*Parking stand*
2	*Parking stand pin*

Roller and skid setup

Always perform the adjustments on a level ground with the PTO disconnected.
Roller and skids must not become detached from the machine.

1. Skid height can be changed by locating the skid in different skid adjustment slots.
2. Roller position must be adjusted to suit the working conditions.
3. The front of the machine should always be higher than the back.
4. Set the wing hydraulics In float when cutting.
5. At the turn-row lock wing rams and lift the machine. After the turn is complete drop the machine down and put the wing hydraulics in float again.

NOTE: For cutting crops over 2 foot high:
- Set the wings down and the centre body on level ground.
- Lift the tractors arms about 3 to 4 inches upwards so the front of the deck is at a higher pitch then the rear.

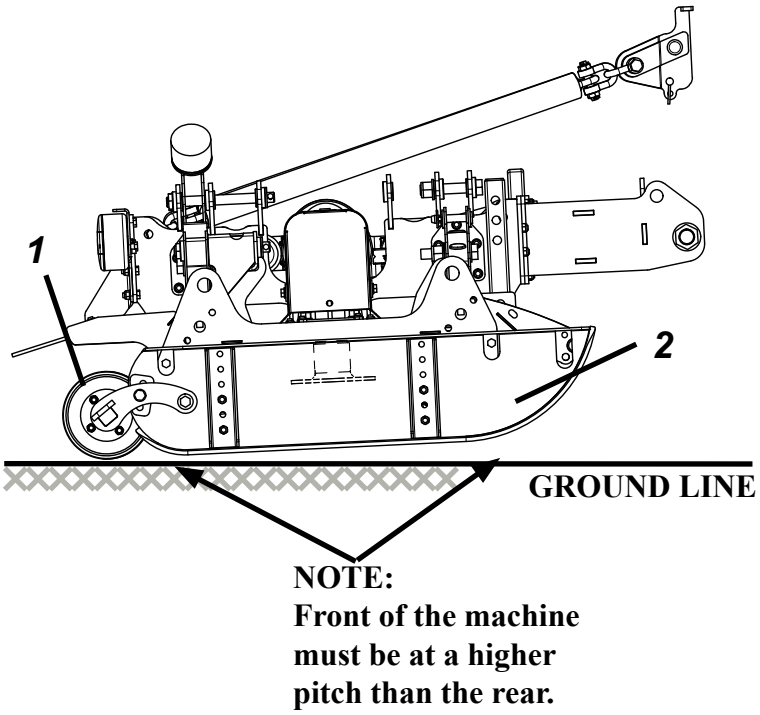

1	*Roller*
2	*Skid*
3	*Skid adjustment slots*
4	*Roller height adjustment slots*
5	*Roller pivot arm*

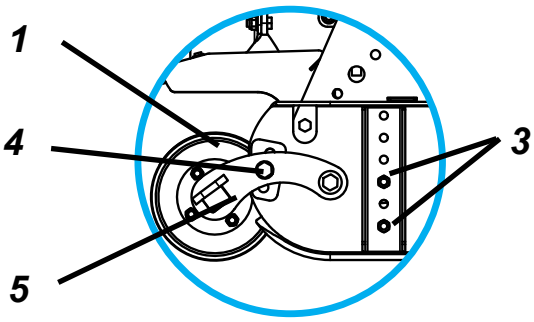

Castor wheel

Always perform the adjustments on a level ground with the PTO disconnected.

TYPE 1

The height of the castor wheels can be adjusted. To do so unscrew the castor wheel arm mounting bolts, locate the arm in the desired position and secure by tightening the bolts. Repeat the steps for all other wheels on the machine.

1	*Castor wheel arm*
2	*Castor wheel yoke*
3	*Castor wheel*
4	*Castor wheel arm mounting bolts*
5	*Castor wheel yoke mounting bolts*

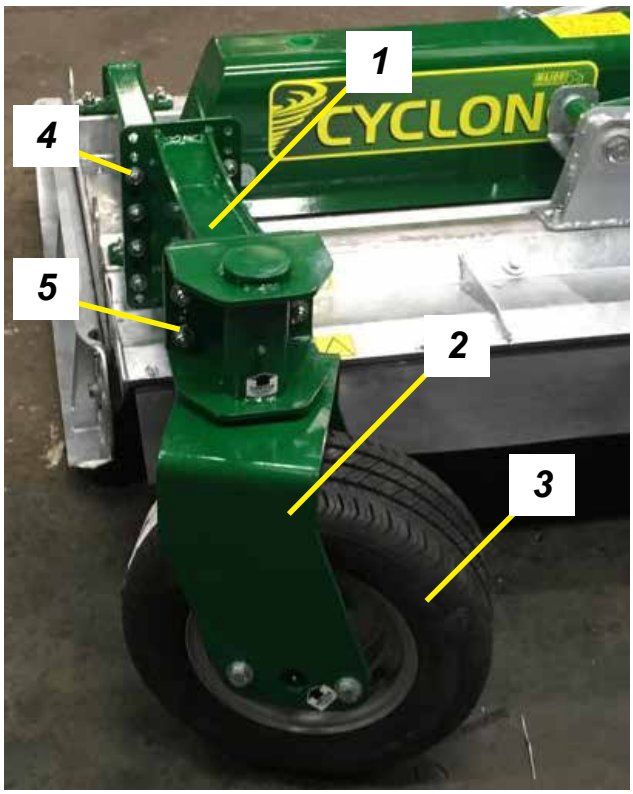

TYPE 2

To adjust the height of the wheel - rotate the top link until the desired height is achieved. Repeat on all wheels.

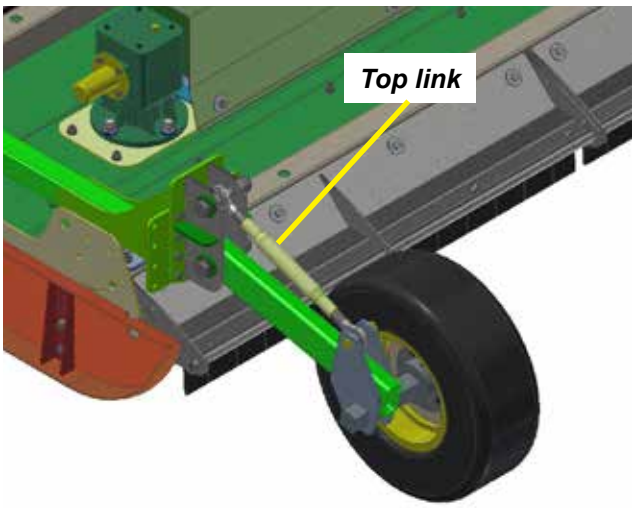

Maintenance

In order to keep your Major machine in a good working order it is necessary to conduct maintenance on a regular basis. Only competent and skilled persons who have fully read and understood this operator's manual are allowed to carry out maintenance on this machine. It is important to replace worn parts immediately with genuine Major spare parts. These parts are manufactured to the same specification as the machine and will provide the best result. Genuine Major spares can be obtained from MAJOR or your local MAJOR dealer.

All maintenance checks and operations must be carried on a firm level ground. The machine must always be disconnected form the tractor before any cleaning, lubricating and servicing operations can be carried out. If works must be carried out under the machine, ensure that the props, jacks, stands, hoists or cranes are capable of supporting the machine securely.

If emergency operations are required whilst the machine is connected to the tractor, switch off the engine of the tractor, remove the key from the ignition, engage the parking brake and disengage the PTO. An example of such emergency situation is the complete blockage of the machine in the field. To clear out the blockage follow the safety steps described above and clear out the blockage. Ensure there are no ropes, twines or wires wrapped around the rotors.

Machine storage

To prolong the life of your machine it is recommended to store it in a dry environment. Prior to parking the machine for storage, wash the machine thoroughly, especially underneath, and ensure that there is no grass or debris left on the machine. Lubricate all pivot points with EP2 type grease. Check for oil leaks and fix these if required. Any parts of the machine with damaged paint/galvanised surface must be painted.

PTO Shaft Maintenance

Guard Removal and Yoke End Greasing

1. Prise back locking tabs
2. Pull back PTO Guard
3. Grease points as shown
4. Push Guard into position
5. Click into place
6. Tie check chain

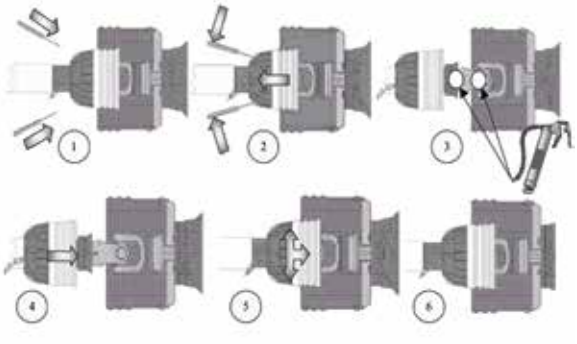

PTO Greasing Intervals

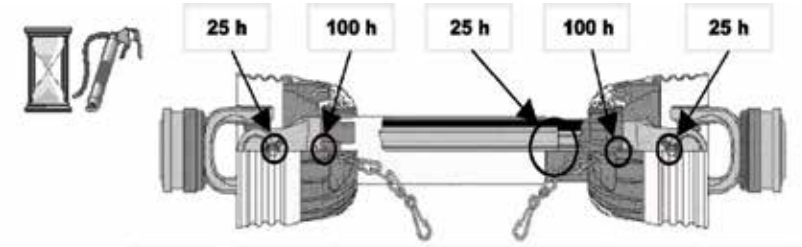

Shearbolt Replacement *(if applicable)*

1. Slide yoke shield back.
2. Drive out sheared bolt with hammer and punch.
3. Align holes and install new shear bolt. (Use only genuine MAJOR replacement shear bolts)
4. Slide yoke shield securely in place

Always fit PTO shaft with the shearbolt/slip-clutch end connected to the machine as directed on the PTO guarding.

Transmission Bolts

All nuts and bolts in the transmission including Rubber couplings, Star Drives, PTO Shafts and Gearboxes should be checked for tightenes after mowing at the following intervals:
1st 50 Acres
1st 100 Acres
1st 250 Acres
And every 250 acres thereafter.

Roller

Check the of condition of the rollerend (stub axle) at the end of every season. Roller shaft (stub) must be able to rotate freely and without excessive play. If necessary, remove the roller assembly and adjust the tightness of the bearings.

Replacement of wear parts

Blades, blade backs, blade bushing, blade bolts and nuts must be checked on a regular basis for wear and defection. MAJOR recommends to visually check the blade assemblies every 40 hours of operation. This interval may change depending on the operational conditions.
Replace any damaged or worn parts immediately, failure to do so can result in blade breakages and can cause damage to the equipment or injuries to the operator and others nearby.
Blunt blades must be sharpened or replaced, failure to do so will result in a poor quality cut and excessive use of power from your tractor.

ENSURE BLADE ROTATION AND TIMING IS CORRECT AFTER SERVICING TRANSMISSION.

Pay attention when servicing or detaching components from the machine. Subassemblies and parts e.g. blade assemblies, gearboxes, rollers, guards, skids, wheels etc. can weigh up to 100 kilograms individually and must be supported adequately before fully detaching from the machine.

Clearing out a blockage

Always wear appropriate PPE when clearing out blockages.

If blockage of blades occurs proceed as follows:
1. Set the machine into transport position (including the top links);
2. Park the tractor on level ground, switch off the engine and remove the key from the ignition;
3. Apply a handbrake and disconnect the PTO shaft;
4. Using a pressure washer clear out the excess material built up around the blades. If the pressure washer is not available use your hand to remove the grass from around the blades, bearing in mind that there might be wires wrapped up around the rotors.

Wing shafts alignment

Ensure that after servicing the transmission, the wing pto shaft yokes are correctly aligned as shown in the diagram below – winged models only. If the shaft journals are fitted incorrectly the damage will only occur when the wings are raised into transport position.

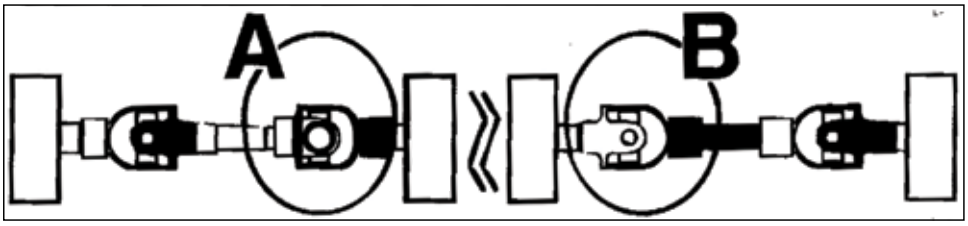

Troubleshooting

Fault	Cause	Remedy
Machine is getting blocked	Material too high or too much material	Reduce the ground speed but maintain required rpm from the PTO input
	Grass is too wet	Stop and wait until grass is dried
	Worn or dull blades	Sharpen or replace blades
Leaves a streak of uncut or partially cut grass	Blades dull or bent	Sharpen or replace blades
	Carrier RPM too low	Use correct PTO speed
	Field conditions are so wet that the tractor tyre is pushing grass into mud	Too wet to mow. Stop operation and wait until grass is drier
	Ground speed too fast	Reduce ground speed by shifting to a lower gear
	Possible build-up materials under mower	Clean mower
	Blades mounted incorrectly (cutting edge against direction rotation)	Change blades so that cutting edge is facing correct rotation.
Material discharges from mower unevenly; bunches of material along with swath	Material too high and/or too much material	Reduce ground speed but maintain 540rpm at tractor PTO or make two passes over material. Raise mower for the first pass and lower to desired height for the second and cut a 90 degree angle to first pass
Gearbox overheating	Low on lubricant	Fill to proper level
	Improper type lubricant	Replace with proper lubricant
	Excessive grass / debris build-up around gearbox	Remove grass, etc from machine
Blade/bullets is scalping ground	Mower too low	Raise mower-reset wheels
	Field is ridged	Cut field at a different angle
	Field is too wet	Stop and wait until it is dried
Mower will not cut.	Shear bolt sheared	Install new shear bolt
Blades/bullets wear too fast	Cutting in sandy conditions	Increase cutting height
	Cutting in rocky conditions	Increase cutting height
	Blades hitting ground	Increase cutting height
Mower seems to require excessive power	Advancing into grass too rapidly	Reduce forward travel speed
	Hitting ground	Raise mower and reset wheels
	Worn or dull blades	Sharpen or replace blades
	Tractor not large enough	Use larger horsepower tractor
Excessive vibration	Check gearbox bolts	Tighten if loose
	Check for loose nuts on blades	Tighten if loose
	Blade broken	Replace blades, in set
	New blade or bolts matched with worn blade or bolts	Replace blades or bolts in sets
	Drivelines not phased correctly. Implement and tractor yokes must be in line	Phase the driveline. Replace if necessary
Noisy machine	Worn bearing	Replace bearings
	Low oil in gearbox	Check level and add oil
	Loose Parts	Check all bolts are fully tightened
	Wrong PTO rpm rate	Check PTO rate & adjust as necessary
	Rotors bent / broken	Replace bent or missing blades
	Bent PTO shaft	Check PTO shafts are aligned correctly
		Check output shaft on gearboxs are not bent
		Check driveline between gearboxes is aligned.

Gearbox leaking	Damaged oil seal	Replace seal
	Bent shaft	Replace oil seal and shaft
	Shaft rough in oil seal area	Replace or repair shaft
	Oil seal installed incorrectly	Replace seal
	Oil seal not sealing in the housing	Replace seal or use a sealant on outside diameter of seal
	Oil level too high	Drain oil to proper level
	Hole in gearbox	Replace the gearbox
	Gasket damaged	Replace gasket
	Bolts loose	Tighten bolts

Lubrication schedule

Use EP2 type grease or equivalent.
Use oil which conforms to 85W/140 standards.

	Grease points	Initially	25 hours	40 hours	80 hours	400 hours
All PTO Shaft Yoke Ends		●	●			
PTO tubes		●	●			
Check oil levels in the gearboxes					●	
Replace oil in gearboxes						●
Wing eye pivot	2	●		●		
Spinning undersole disk	10	●		●		
Hydraulic Ram	4x2	●		●		
Roller stub axles	6	●		●		
Castor wheel pivot	2			●		
Castor wheel axle	2x2			●		

Spinning Undersole Disk *(if applicable)*

The Disk should be able spin freely. Slight side-to-side rocking motion is allowed.
In order to adjust the disk please do the following:

- Remove the assembled Spinning Undersole Disk (USD-GA1) from the machine;
- Remove seal (Item 7);
- Tighten up the lock nut (Item 8) if required;
- Place the seal back in position;
- Bolt the assembled unit (USD-GA1) back to the machine.

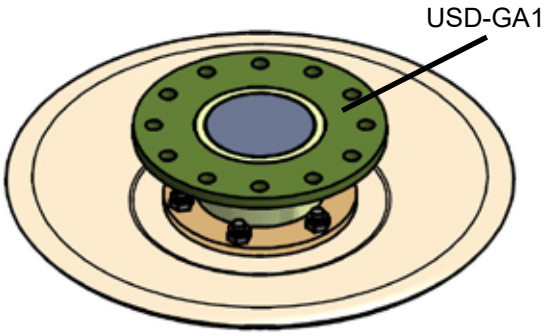

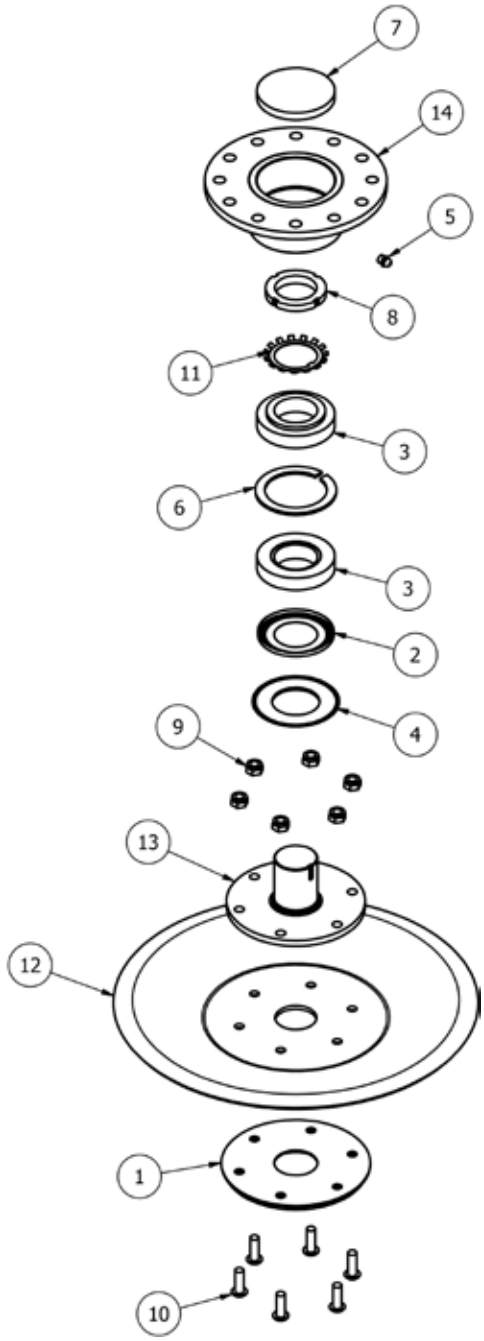

Spare Parts - CYCLONE

MJ30-920

MJ30-920 Overview

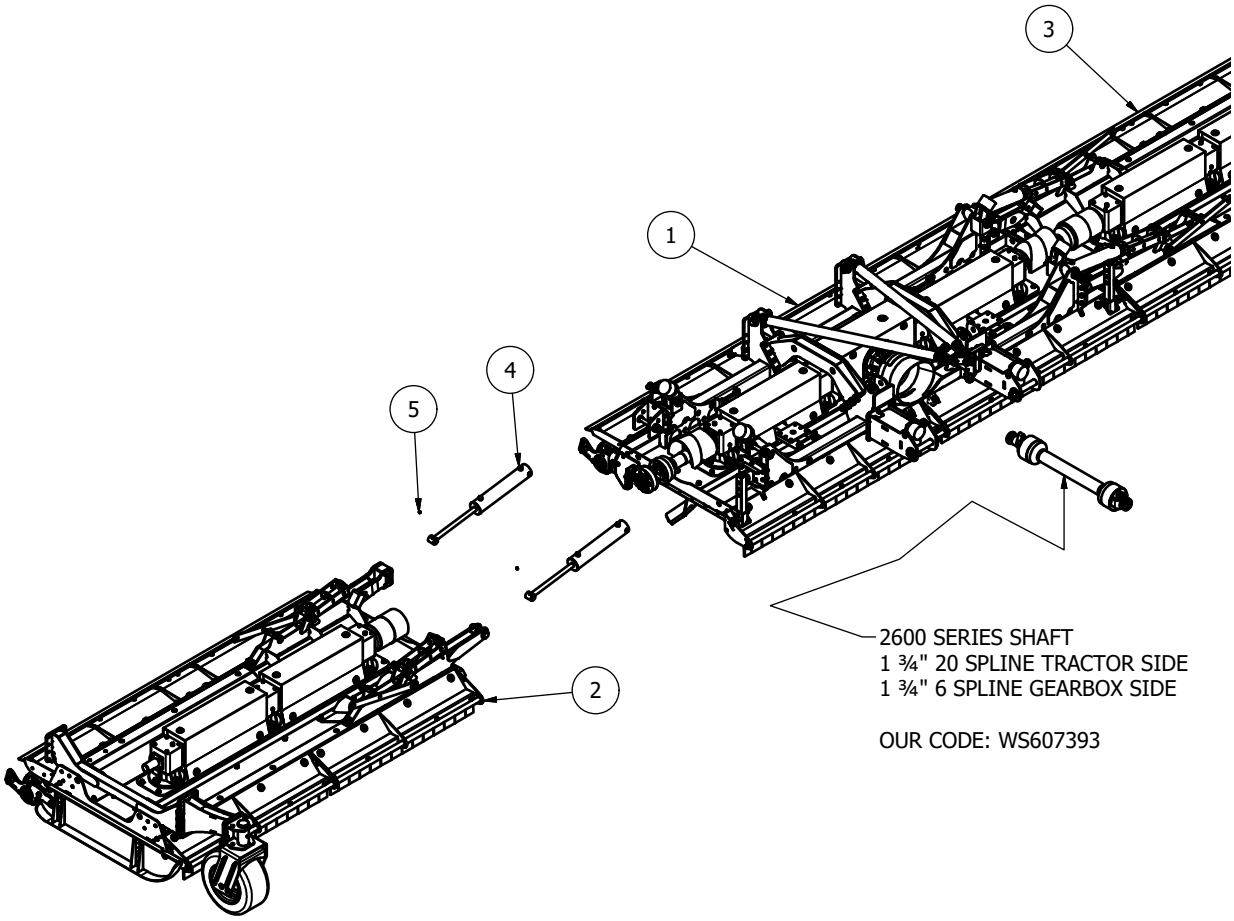

Item	Part No.	Description	Qty
1	MJ30-920-BDGA1	920 CYCLONE BODY	1
2	MJ30-920-WGGA1	920 CYCLONE WING	1
3	MJ30-920-WGGA1LH	920 CYCLONE WING (LH)	1
4	CY-920-WR	CYCLONE WING RAM	4
5	851	GREASE NIPPLE M8x1.25 STR	4

MJ30-920 Body Assembly

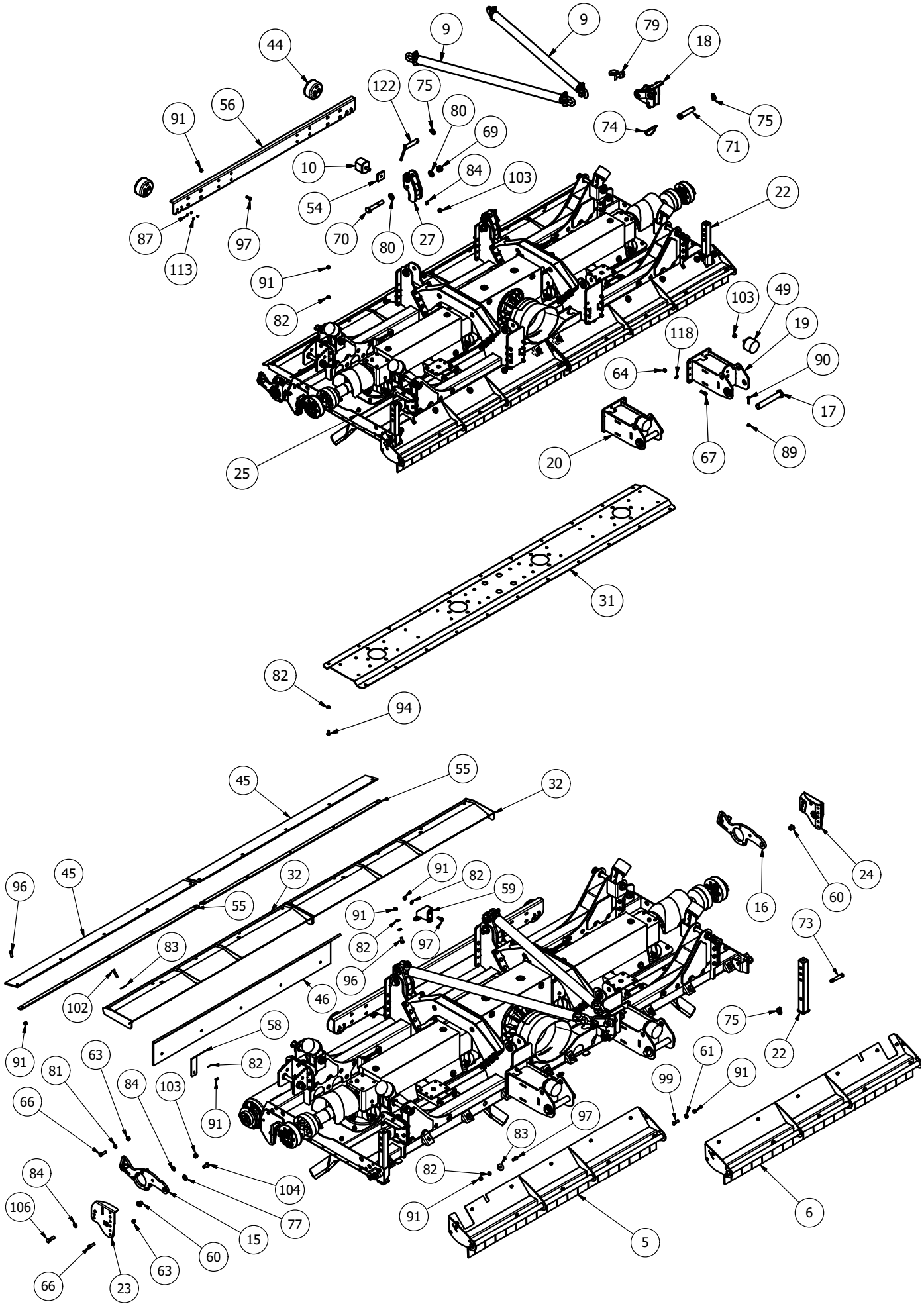

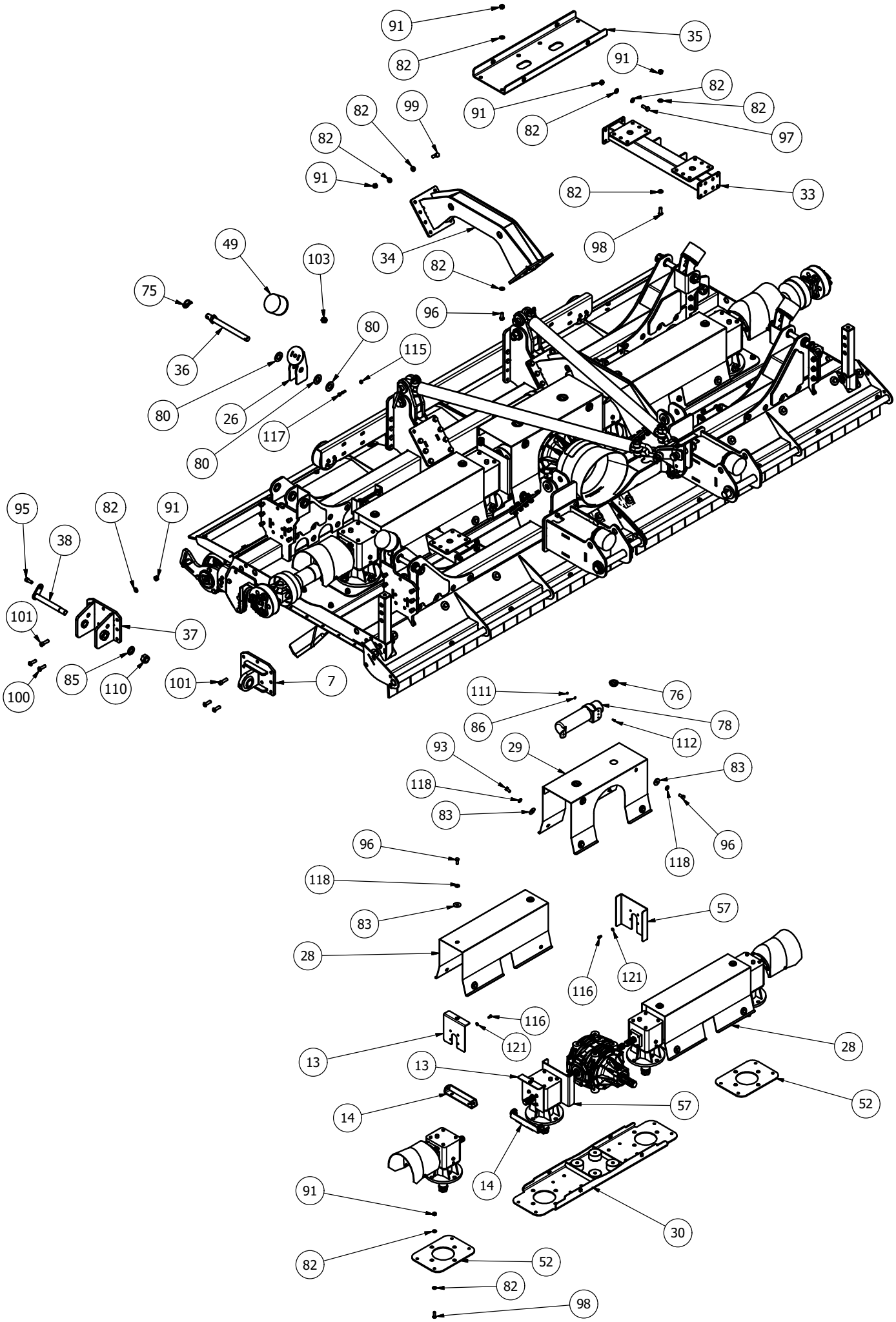
91
35
82
91
82
82
91
82
97
82
99
82
91
82
33
98
34
82
49
103
75
96
80
115
36
80
26
117
80
95
82
91
38
101
37
85
110
101
7
100
111
76
86
78
112
93
29
83
118
83
96
118
96
118
57
83
28
116
121
116
121
13
28
13
52
57
14
14
91
30
82
52
82
98

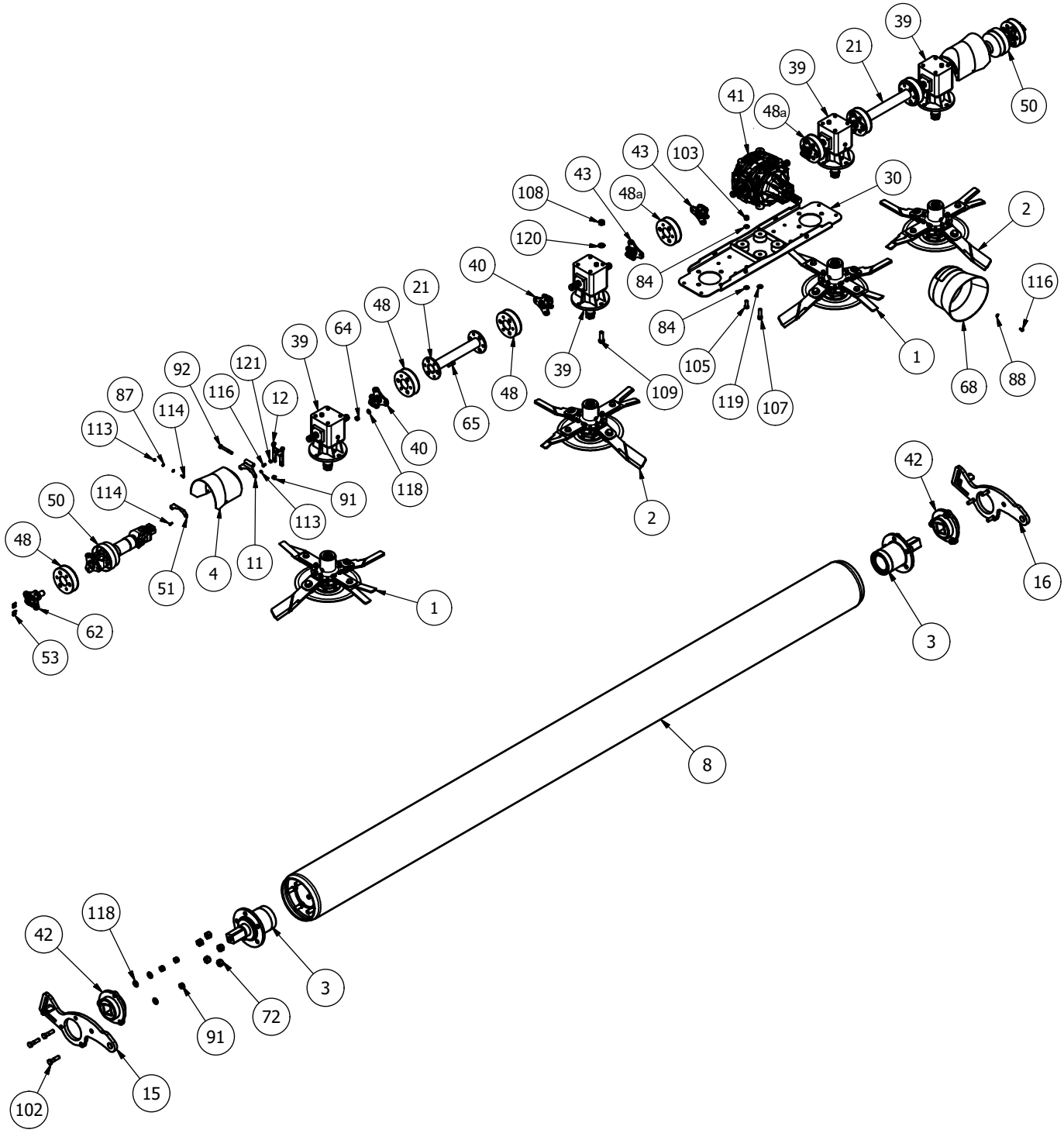

MJ30-920 Body Assembly - Parts list

Item	Part No.	Description	Qty
1	**985-DCBLDHT3X-L**	**985 TREBLE CUT Anti-Clk**	**2**
2	**985-DCBLDHT3X-R**	**985 TREBLE CUT Clk**	**2**
3	**CYC-AXH-01**	**AXLE HOUSING**	**2**
4	MJ30-350-CVR30	MODIFIED OVAL GUARD	2
5*	**MJ30-920-GRD16**	**BODY FLAP GUARD**	**1**
6*	**MJ30-920-GRD16H**	**BODY FLAP GUARD**	**1**
7	MJ30-920-PVE03	WING PIVOT EYE	2
8	MJ30-920-ROLB20	BUFFER AXLE BODY ROLLER	1
9*	**MJ30-920-STRP10**	**920 CHAIN SLING**	**2**
10	MOT75-75	MOT75x75 BUFFER	2
11	11RM-C10	COVER PIVOT	2
12	11RM-C11	COVER PIVOT	2
13	3000T-GRD03	GEARBOX COVER BRKT	4
14	3000T-GRD15	GUARD BASE MOUNT	4
15	CYC-RPV10	SCRAPER PIVOT ARM	1
16	CYC-RPV10H	SCRAPER PIVOT ARM	1
17	CYC-USLK05	DIA 38mm LINKAGE PIN	2
18	CYC-USLK08	CHAIN MOUNT	1
19	CYC-USLK20	EXTENDED CAT 3 LINKAGE	1
20	CYC-USLK21	EXTENDED CAT 3 LINKAGE	1
21	DRV-RC-423	5500MT WING DRIVE TUBE	2

22	MJ30-350-SD01	PARK STAND	2
23	MJ30-350-SKR01	CYCLONE REAR SKID	1
24	MJ30-350-SKR01H	REAR SKID	1
25	MJ30-920-BD01	920 BODY	1
26	MJ30-920-BF01	BUFFER STAND	4
27	MJ30-920-BF05	REAR BUFFER STAND	2
28	MJ30-920-CVR03	BODY GEARBOX COVER	2
29	MJ30-920-CVR09	CENTRE GEARBOX COVER	1
30	MJ30-920-GBM05	CYCLONE GBOX MOUNT	1
31	MJ30-920-GBR03	BODY UNDERSIDE TROUGH	1
32	MJ30-920-GRD04	BODY ROLLER GUARD	2
33	MJ30-920-LK01	LINKAGE MOUNT	2
34	MJ30-920-LK04	LINKAGE MOUNT	2
35	MJ30-920-LK13	GBOX LINKAGE TIE	1
36	MJ30-920-LK15	PIVOT PIN	4
37	MJ30-920-PVE40	WING PIVOT EYE	2
38	MJ30-920-PVE50	WING PIVOT PIN	2
39*	**LF140T/1**	**6 SPLINE 'T' BOX RATIO 1.1 (140.881)**	**4**
40	8SM18	6 SPLINE STAR DRIVE	4
41*	**T301B**	**6 SPLINE 'T' BOX 1.1,35 SHORT**	**1**
42	CYC-AXH-55	AXLE BUFFER	2
43	DRV-6S-52DC	6 SPLINE 50mm DRIVE	4
44	LALK027	LIGHT LOOM c/w SLEEVE	1
45	MJ30-920-GRD06US	BODY REAR RUBBER FLAP	2
46	MJ30-920-GRD31	BODY ROLLER RUBBER FLAP	1
47	MJ30-920-GRD31H	BODY ROLLER RUBBER FLAP	1
48	**MJRC-113**	**113 PCD RUBBER COUPLING**	**6**
48a	**MJRC-113-920**	**113 PCD RUBBER COUPLING 920 center**	**2**
49	MOT75	DIA 100x75 BUFFER	6
50	WS601650-S	920 WING PTO SHAFT	2
51	11RM-C14	COVER MOUNT	2
52	3000T-BD14	TROUGH REINF'	2
53	CY-320-GBLK01	GBOX LOCK	4
54	MJ30-920-BF11	BUFFER SPACER	2
55	MJ30-920-GRD07	GUARD RUBBER CLAMP	2
56	MJ30-630-LK20	LINKAGE BRACE	1
57	MJ30-920-GRD27	CENTRE GEARBOX COVER BRKT (END)	2
58	MJ30-920-GRD32	REAR RUBBER SUPPORT	10
59	MJ30-920-GRD35	REAR GUARD SUPPORT	2
60	3000T-SKD06	ROLLER PIVOT STUB	2
61	8SM9-3	BLADE BACK SPACER	2
62	DRV-6S-135	WING STAR DRIVE 6 SPL	2
63	1/2F	1/2" FINE NYLOC NUT	6
64	1/2HEX10.9	1/2HEX10.9	64
65	12x112FSKS	1/2"x1 1/2" FINE SOCKET HEAD 12.9	48
66	12x134FBZP	1/2"x1 3/4" FINE BOLT	6
67	12x134FSKS	1/2"x1 3/4" FINE SOCKET HEAD 12.9	16
68	190-000-535	PTO GUARD (EXTENDED OVAL)	1
69	1F	1" FINE NYLOC NUT	2
70	1x6FBZP	1"x6" FINE BOLT	2
71	3026	TOP LINK PIN (CAT 3, 32 x 125mm)	1
72	57316B1	M16 AXLE STUD NUT	10
73	73	CAT 1 PIN DIA 19x76mm	2
74	AG272	SHAFT LOCK PIN DIA 11	1
75	AN099/10	LINCH PIN DIA 9.5	9
76	CP176-181MG1	45mm INSERT	2
77	CW39174	DISC SPRING 39x17x4 (YELLOW)	2
78	DH-10404	DOCUMENT HOLDER 350x85	1
79	DSR-1-1-8	1 1/8" RATED 'D' SHACKLE	1
80	FW1	DIA 1" FLAT WASHER	16
81	FW12	1/2" FLAT WASHER	2
82	FWM12	M12 FLAT WASHER	264
83	FWM12XL	M12 FLAT WASHER (EX-LARGE)	42
84	FWM16	M16 FLAT WASHER	14
85	FWM24	M24 FLAT WASHER	2
86	FWM5	M5 FLAT WASHER	4
87	FWM6	M6 FLAT WASHER	12
88	FWM8	M8 FLAT WASHER	4
89	M10	M10 NYLOC NUT	2
90	M10x50BZP	M10x50 BOLT	2
91	M12	M12 NYLOC NUT	199
92	M12x100BZP	M12x100 BOLT	2
93	M12x25SZP	M12x25 SET BOLT	4
94	M12x30SKBH	M12x30 SOCKET BUTTON HEAD 10.9	27
95	M12x30SKS	M12x30 SOCKET HEAD SCREW	2
96	M12x30SZP	M12x30 SET BOLT	36
97	M12x35BZP	M12x35 BOLT	36
98	M12x35SKBH	M12x35 SOCKET BUTTON HEAD 10.9	12
99	M12x40BZP	M12x40 BOLT	34
100	M12x40SKBH	M12x40 SOCKET BUTTON HEAD 10.9	16
101	M12x40SKS	M12x40 SOCKET HEAD SCREW	28
102	M12x50BZP	M12x50 BOLT	16
103	M16	M16 NYLOC NUT	14
104	M16x30SZP	M16x30 SET BOLT	6
105	M16x40SZP	M16x40 SET BOLT	4
106	M16x50BZP	M16x50 BOLT	2
107	M16x55SKS129	M16x55 SOCKET HEAD 12.9	4
108	M20	M20 NYLOC NUT	16
109	M20x60SZP109	M20x60 SET BOLT 10.9	16
110	M24	M24 NYLOC NUT	2
111	M5	M5 NYLOC NUT	4
112	M5x16SZP	M5x16 SET BOLT	4
113	M6	M6 NYLOC NUT	12
114	M6x16SZP	M6x16 SET BOLT	8
115	M8	M8 NYLOC NUT	4
116	M8x16SZP	M8x16 SET BOLT	36
117	M8x40BZP	M8x40 BOLT	4
118	NL12SP	M12 SP NORDLOCK	90
119	NL16SP	M16 SP NORDLOCK	8
120	NL20SP	M20 SP NORDLOCK	16
121	NL8SP	M8 SP NORDLOCK	32
122	S8861	SHEAR PIN DIA 28x123mm	2

***- Further breakdown provided**

MJ30-920 WIng Assembly

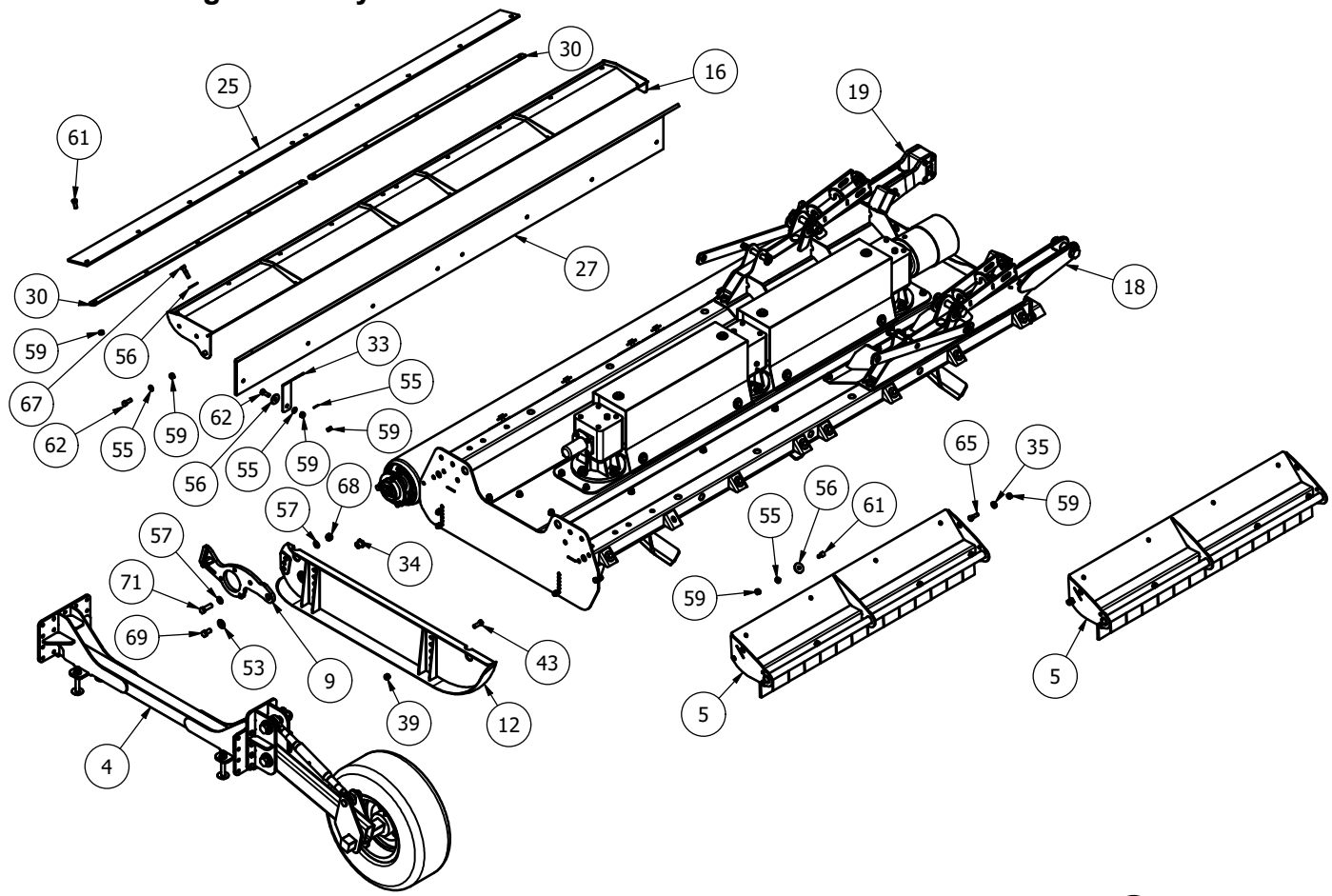

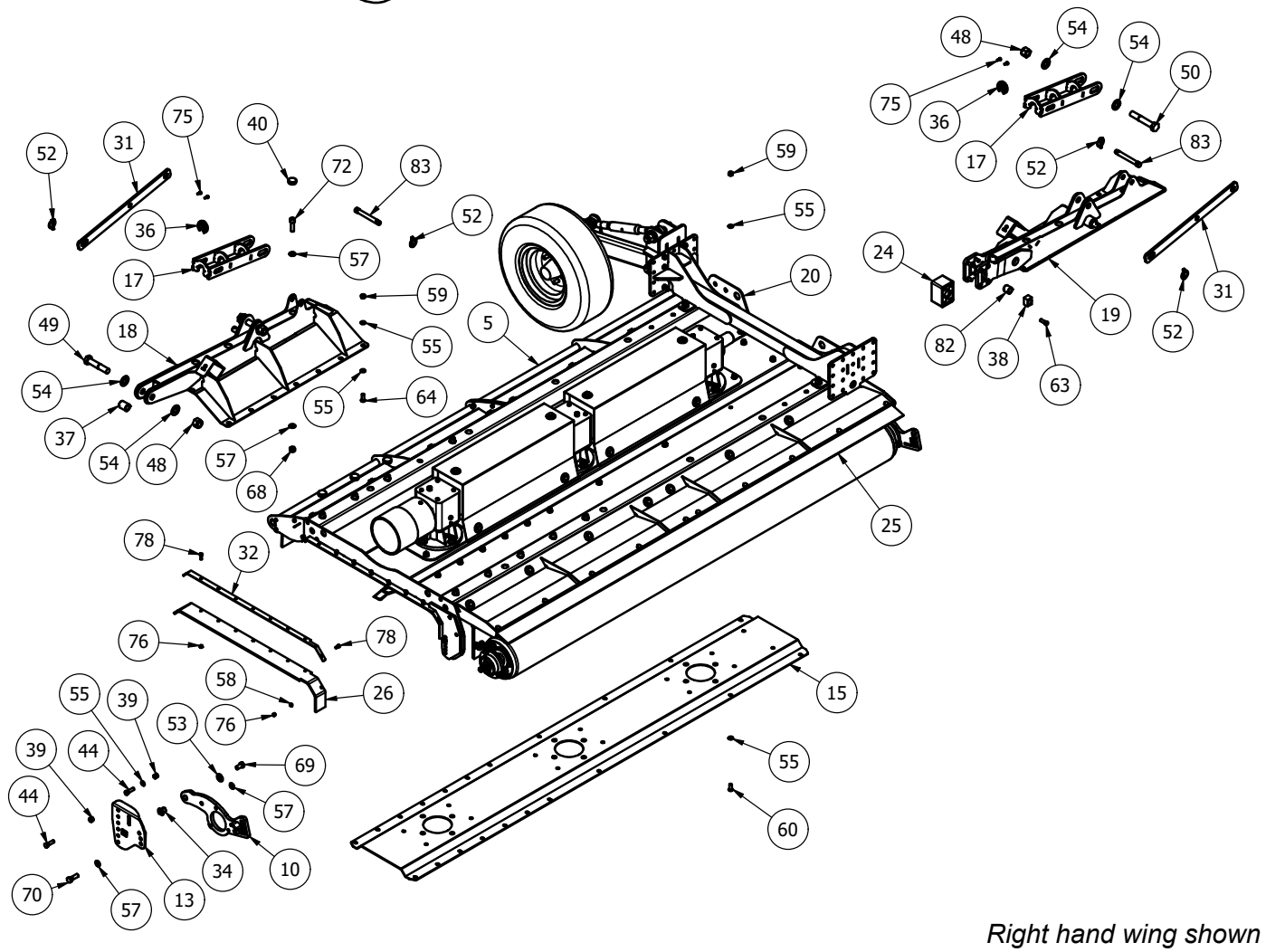

Right hand wing shown

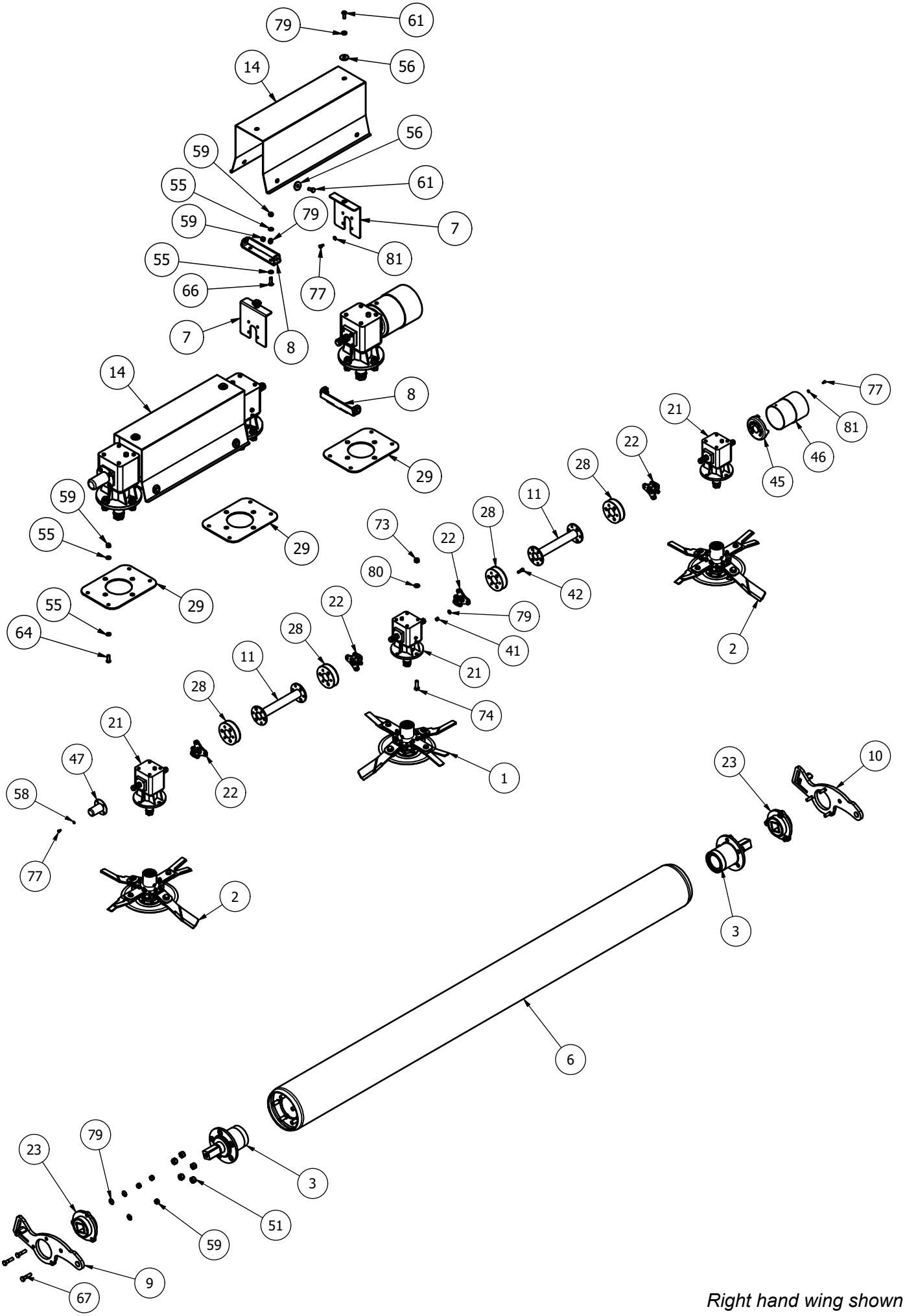

Right hand wing shown

MJ30-920 Wing Assembly - Parts list

Item	Part No.	Description	Qty
1*	**985-DCBLDHT3X-L**	**985 TREBLE CUT Anti-Clk**	**1**
2*	**985-DCBLDHT3X-R**	**985 TREBLE CUT Clk**	**2**
3*	**CYC-AXH-01**	**AXLE HOUSING**	**2**
4*	**CYC-RDW-WGKIT11**	**CYCLONE DBL IMPLEMENT WING KIT**	**1**
5*	**MJ30-920-GRD10**	**WING FLAP GUARD**	**2**
6	MJ30-920-ROLW20	BUFFER AXLE WING ROLLER	1
7	*3000T-GRD03*	*GEARBOX COVER BRKT*	*4*
8	*3000T-GRD15*	*GUARD BASE MOUNT*	*4*
9	CYC-RPV10	SCRAPER PIVOT ARM	1
10	CYC-RPV10H	SCRAPER PIVOT ARM	1
11	DRV-RC-423	5500MT WING DRIVE TUBE	2
12	MJ30-301-SKD01R	300 CYCLONE SKID (RH)	1
13	MJ30-350-SKR01H	REAR SKID	1
14	MJ30-920-CVR01	WING GEARBOX COVER	2
15	MJ30-920-GBR01	WING UNDERSIDE TROUGH	1
16	MJ30-920-GRD01	WING ROLLER GUARD	1
17	MJ30-920-RS01	RAM STOP	2
18	MJ30-920-WA07	WING ARM	1
19	MJ30-920-WARH01H	WING ARM (FLEX HINGE)	1
20	MJ30-920-WG01	920 RIGHT WING	1
21*	**LF140T/1**	**6 SPLINE 'T' BOX RATIO 1.1 (140.881)**	**3**
22	8SM18	6 SPLINE STAR DRIVE	4
23	CYC-AXH-55	AXLE BUFFER	2
24	MJ30-350-RHB00	RUBBER MOUNT	1
25	MJ30-920-GRD02US	REAR RUBBER FLAP	1
26	MJ30-920-GRD09H	WING RUBBER	1
27	MJ30-920-GRD30	WING ROLLER RUBBER FLAP	1
28	MJRC-113	113 PCD RUBBER COUPLING	4
29	3000T-BD14	TROUGH REINF'	3
30	MJ30-920-GRD14	GUARD RUBBER CLAMP	2
31	MJ30-920-LK14	TRANSPORT LOCK	2
32	MJ30-920-GRD08	WING CLAMP	1
33	MJ30-920-GRD32	REAR RUBBER SUPPORT	8
34	3000T-SKD06	ROLLER PIVOT STUB	2
35	8SM9-3	BLADE BACK SPACER	2
36	MJ30-560T-HAB06	RAM CURB STOP	2
37	MJ30-920-PVE06	PIVOT BUSH	1
38	MJ30-RMH-15	SLIDING CUBE	2
39	1/2F	1/2" FINE NYLOC NUT	7
40	111047	DIA 40 (1-3mm) INSERT	18
41	1/2HEX10.9	1/2HEX10.9	24
42	12x112FSKS	1/2"x1 1/2" FINE SOCKET HEAD 12.9	24
43	12x112SZP	1/2"x1 1/2" FINE SET BOLT	4
44	12x134FBZP	1/2"x1 3/4" FINE BOLT	3
45	190000661	METAL GUARD BASE	1
46	190000760	PLASTIC GUARD COVER	1
47	190592	PTO HAT	1
48	1F	1" FINE NYLOC NUT	3
49	1x5FBZP	1"x5" FINE BOLT	1
50	1x6FBZP	1"x6" FINE BOLT	2
51	57316B1	M16 AXLE STUD NUT	10
52	AN099/10	LINCH PIN DIA 9.5	4
53	CW39174	DISC SPRING 39x17x4 (YELLOW)	2
54	FW1	DIA 1" FLAT WASHER	6
55	FWM12	M12 FLAT WASHER	99
56	FWM12XL	M12 FLAT WASHER (EX-LARGE)	36
57	FWM16	M16 FLAT WASHER	24
58	FWM8	M8 FLAT WASHER	6
59	M12	M12 NYLOC NUT	88
60	M12x30SKBH	M12x30 SOCKET BUTTON HEAD 10.9	10
61	M12x30SZP	M12x30 SET BOLT	30
62	M12x35BZP	M12x35 BOLT	10
63	M12x35LHSKS	M12x35 SOCKET LOW HEAD 10.9	8
64	M12x35SKBH	M12x35 SOCKET BUTTON HEAD 10.9	18
65	M12x40BZP	M12x40 BOLT	2
66	M12x40SKBH	M12x40 SOCKET BUTTON HEAD 10.9	8
67	M12x50BZP	M12x50 BOLT	14
68	M16	M16 NYLOC NUT	12
69	M16x30SZP	M16x30 SET BOLT	2
70	M16x50BZP	M16x50 BOLT	1
71	M16x50SZP	M16x50 SET BOLT	1
72	M16x55SKS129	M16x55 SOCKET HEAD 12.9	10
73	M20	M20 NYLOC NUT	12
74	M20x60SZP109	M20x60 SET BOLT 10.9	12
75	M6x16SZP	M6x16 SET BOLT	4
76	M8	M8 NYLOC NUT	9
77	M8x16SZP	M8x16 SET BOLT	24
78	M8x25BZP	M8x25 BOLT	9
79	NL12SP	M12 SP NORDLOCK	42
80	NL20SP	M20 SP NORDLOCK	12
81	NL8SP	M8 SP NORDLOCK	20
82	OB253230	PLAIN OILITE BEARING BUSH	2
83	S77	CAT 1 PIN DIA 19x127mm	2

***- Further breakdown provided**

Front Guards assembly MJ30-920

MJ30-920 Wing guard (MJ30-920-GRD10)

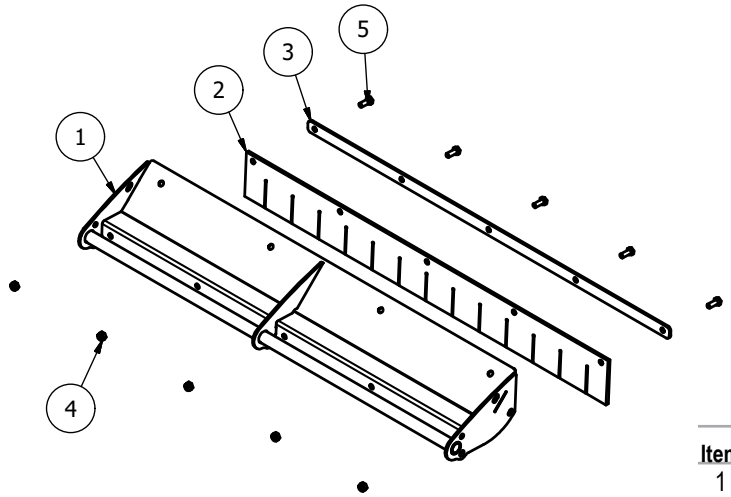

Item	Part No.	Description	Qty
1	MJ30-920-GRD11	WING FLAP GUARD MOUNT	1
2	MJ30-920-GRD15	WING GUARD RUBBER	1
3	MJ30-920-GRD14	GUARD RUBBER CLAMP	1
4	M12	M12 NYLOC NUT	5
5	M12x30SZP	M12x30 SET BOLT	5

MJ30-920 Body Guard

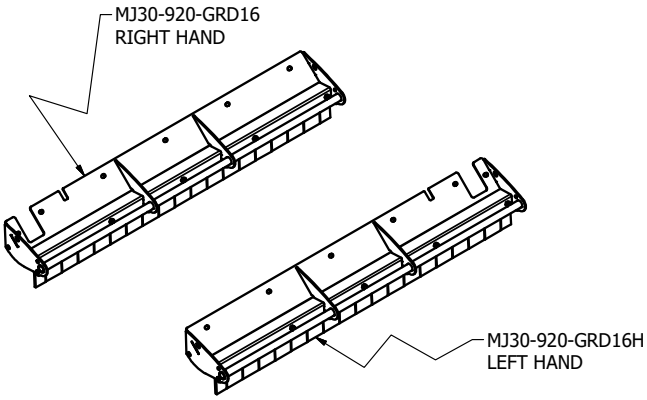

Item	Part No.	Description	Qty
1	**MJ30-920-GRD17**	**BODY FLAP GUARD MOUNT RH**	**1**
1	**MJ30-920-GRD17H**	**BODY FLAP GUARD MOUNT LH**	**1**
2	MJ30-920-GRD20	BODY GUARD RUBBER	1
3	MJ30-920-GRD21	GUARD RUBBER CLAMP	1
4	M12	M12 NYLOC NUT	5
5	M12x30SZP	M12x30 SET BOLT	5

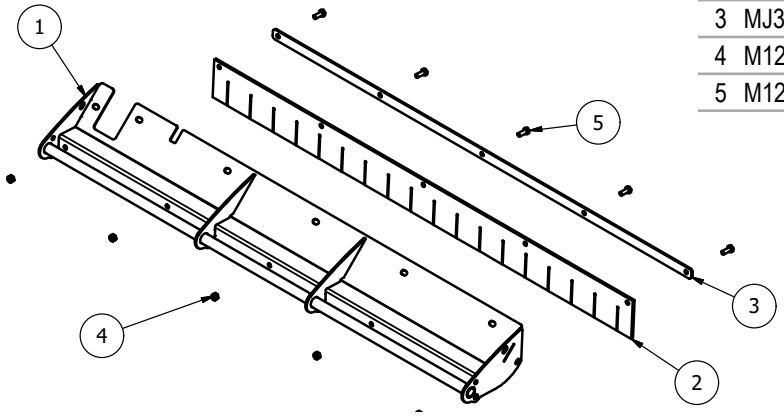

Roller axle stub assembly (CYC-AXH-01)

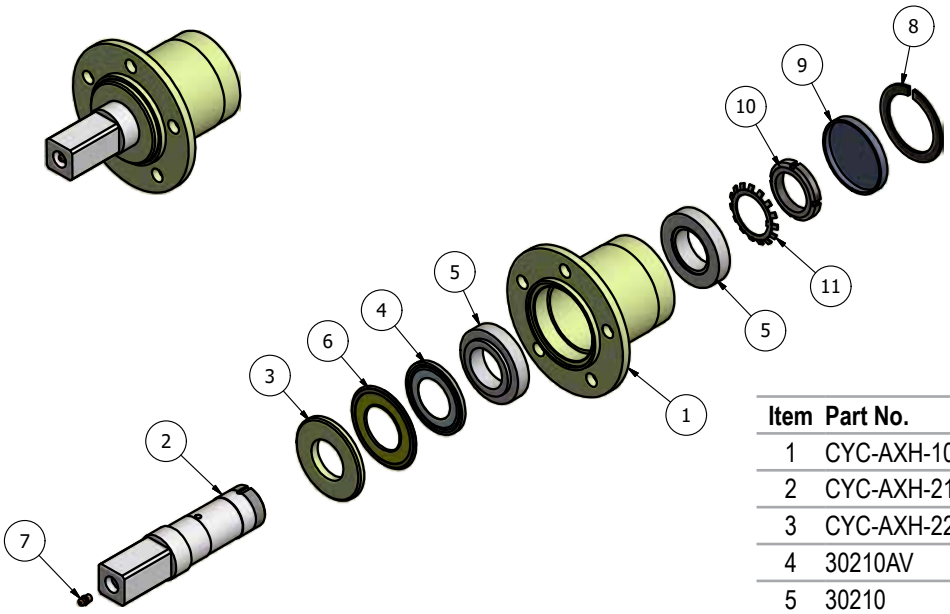

Item	Part No.	Description	Qty
1	CYC-AXH-10	AXLE HOUSING	1
2	CYC-AXH-21	AXLE SHAFT	1
3	CYC-AXH-22	SEAL SPACER	1
4	30210AV	NILOS RING 90x50	1
5	30210	TAPER BRG 90x50x21.75	2
6	5411001	DIA 55xDIA100.5mm WIPE SEAL	1
7	851	GREASE NIPPLE M8x1.25 STR	1
8	AGC3	DIA 90 INT CIRCLIP	1
9	DK90-10	DUST CAP 90x10	1
10	KM10	M50x1.5P LOCK NUT	1
11	MB10	DIA 50mm LOCK TAB	1

Chain sling (MJ30-920-STRP10) (2 per machine)

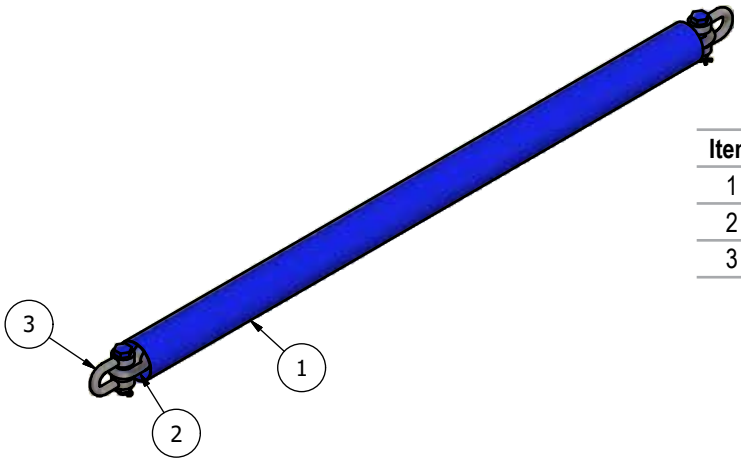

Item	Part No.	Description	Qty
1	MJ30-920-STRP02	COVER (5000403) BLUE	1
2	MJ30-920-STRP11	20x60GR80 CHAIN (MB8.200)	1
3	DSR-7-8	7/8" RATED 'D' SHACKLE	2

50 SQ 5 STUD UNBRAKED (200505 Axle Stub)

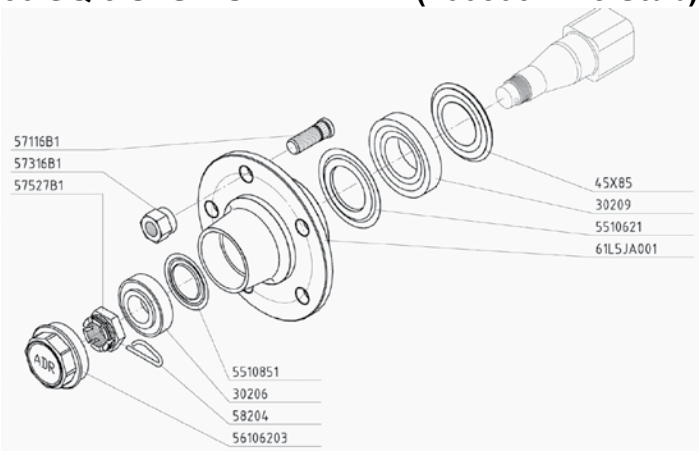

MJ30-920 Hydraulics (CYC-920-HYD01)

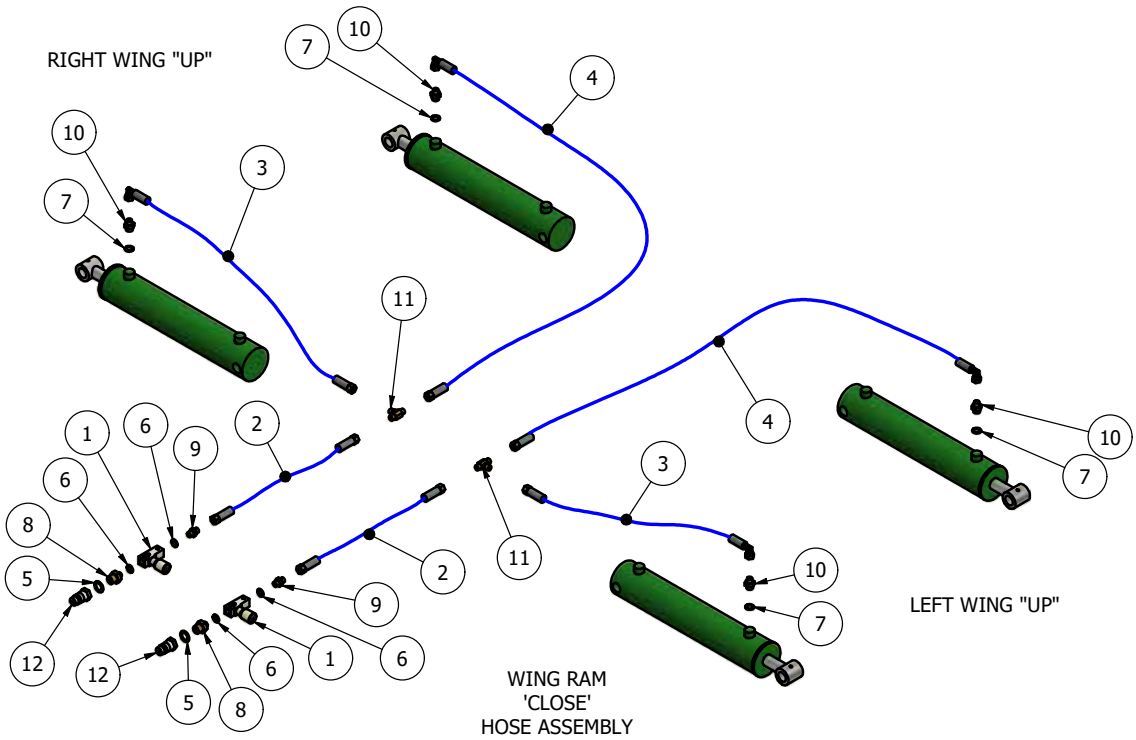

Item	Part No.	Description	Qty
1	1251-5-14	1/4" RESTRICTOR (BLACK) 204010V	2
2	920-HOSE-A	1/4"x 2500mm Str to Str	2
3	920-HOSE-B	1/4"x 2000mm Str to Block 90	2
4	920-HOSE-C	1/4"x 2900mm Str to Block 90	2
5	EDOW12	1/2" DOWTY WASHER	2
6	EDOW14	1/4" DOWTY WASHER	4
7	EDOW38	3/8" DOWTY WASHER	4
8	EMM12-14	1/2"-1/4" M/M CONNECTOR	2
9	EMM14	1/4" M/M CONNECTOR	2
10	EMM3814	3/8-1/4" M/M CONNECTOR	4
11	EMMMT14	1/4" M/M/M CONNECTOR	2
12	QRM12	1/2" QUICK RELEASE MALE	2

Cyclone double implement wing kit (CYC-RDW-WGKIT10)

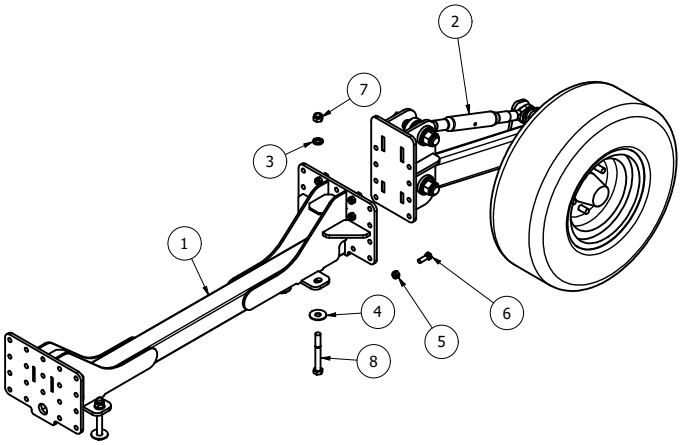

ITEM	PART NUMBER	DESCRIPTION	QTY
1	CYC-RDW-LK01	WING DOUBLE CASTOR MOUNT	1
2	CYC-RDW-01	IMPLEMENT WHEEL ASSEMBLY	1
3	FWM16	M16 FLAT WASHER	4
4	FWM16L	M16 FLAT WASHER (LARGE)	4
5	M12	M12 NYLOC NUT	8
6	M12x35BZP	M12x35 BOLT	8
7	M16	M16 NYLOC NUT	4
8	M16x130BZP	M16x130 BOLT	4

Cyclone implement wheel assembly (CYC-RDW-01)

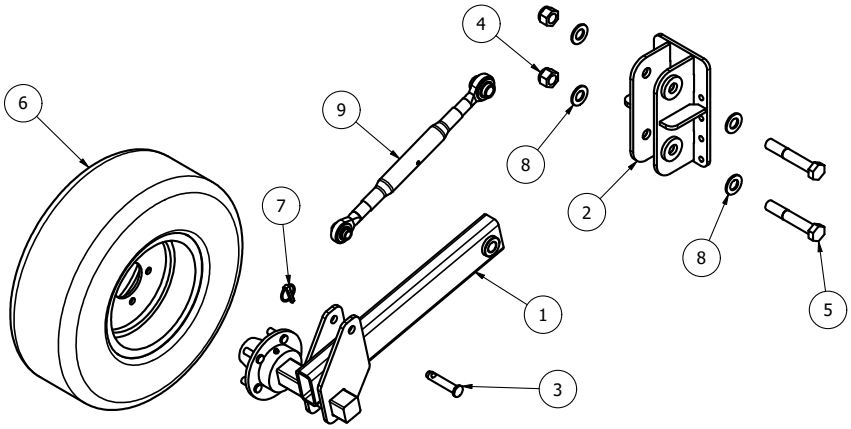

Item	Part No.	Description	Qty
1	CYC-RDW-10	CASTOR STUB ARM	1
2	CYC-RDW-20	CASTOR LINKAGE	1
3	15012	CAT 1 PIN DIA 19x76mm	1
4	1F	1" FINE NYLOC NUT	2
5	1x6FBZP	1"x6" FINE BOLT	2
6	200-60-145	BKT DIA 610x210 5 STUD	1
7	AN099/10	LINCH PIN DIA 9.5	1
8	FW1	DIA 1" FLAT WASHER	4
9	S482-B	CAT 1-2 TOP LINK	1

Cyclone double implement wing kit (CYC-RDW-WGKIT11)

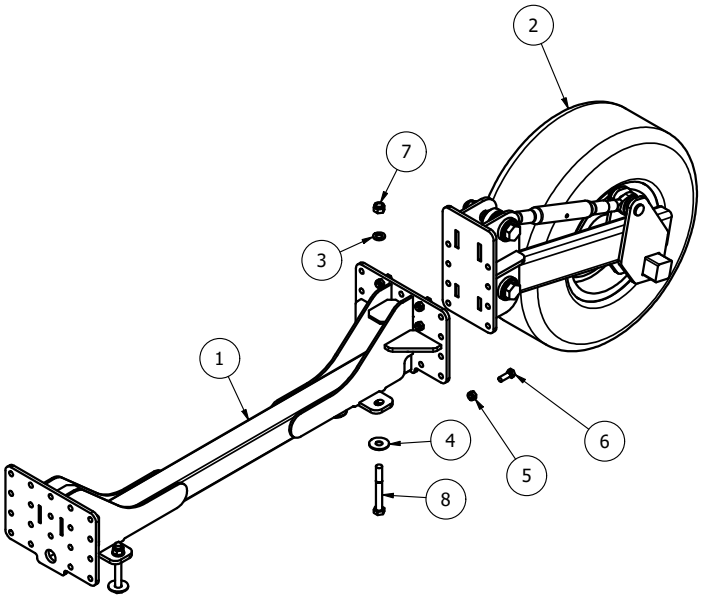

ITEM	PART NUMBER	DESCRIPTION	QTY
1	CYC-RDW-LK01	WING DOUBLE CASTOR MOUNT	1
2	CYC-RDW-01H	IMPLEMENT WHEEL ASSEMBLY	1
3	FWM16	M16 FLAT WASHER	4
4	FWM16L	M16 FLAT WASHER (LARGE)	4
5	M12	M12 NYLOC NUT	8
6	M12x35BZP	M12x35 BOLT	8
7	M16	M16 NYLOC NUT	4
8	M16x130BZP	M16x130 BOLT	4

Cyclone implement wheel assembly (CYC-RDW-01H)

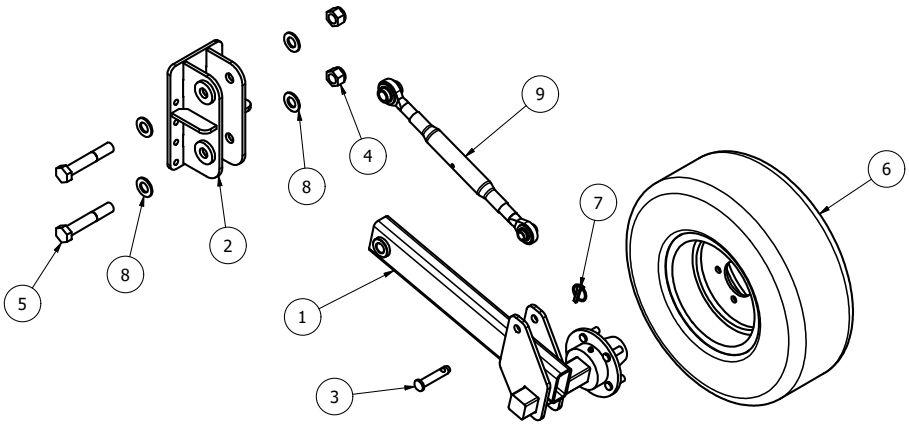

Item	Part No.	Description	Qty
1	CYC-RDW-10H	CASTOR STUB ARM	1
2	CYC-RDW-20	CASTOR LINKAGE	1
3	15012	CAT 1 PIN DIA 19x76mm	1
4	1F	1" FINE NYLOC NUT	2
5	1x6FBZP	1"x6" FINE BOLT	2
6	200-60-145	BKT DIA 610x210 5 STUD	1
7	AN099/10	LINCH PIN DIA 9.5	1
8	FW1	DIA 1" FLAT WASHER	4
9	S482-B	CAT 1-2 TOP LINK	1

MJ30-920 Blade assemblies

985-DCBLDHT3X-L (MJ30-920)

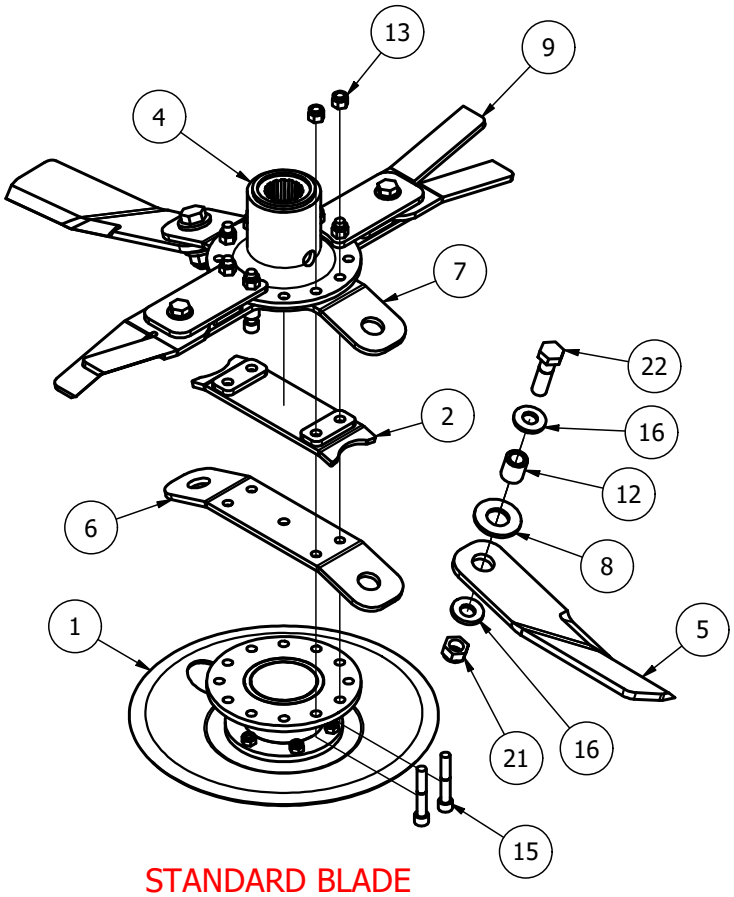

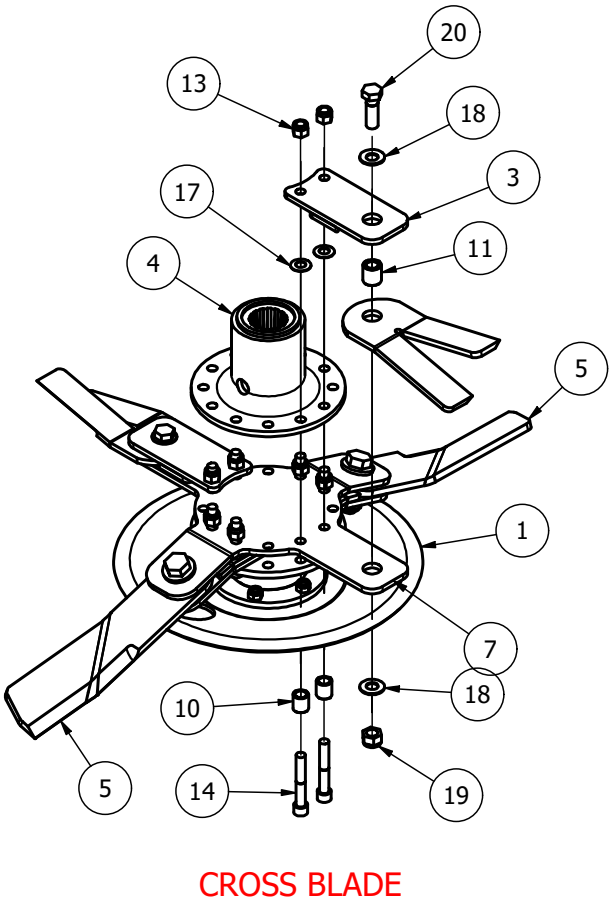

Item	Part No.	Description	Qty
1*	**USD-GA1**	**UNDERSOLE DISC ASSY**	**1**
2	BLDB-3000-STP3	BLADE STOP	1
3	BLDBXT-400-25A	BLADE STOP	2
4	909GT-BM01A	149 BLADE MOUNT	1
5	BLD-37030T-10AC	Twist Blade 370xDia 30 (Anti_Clk)	2
6	BLDB-330-175	BLADE BACK (330 CTR 17.5 deg)	1
7	BLDBX-345-17	CROSS BLADE BACK (345 CTR 17.5 deg)	1
8	BLD-26030H-WSR5	HEAVY BLADE WASHER (DIA 31x5)	2
9	BLD-27025-OVL	DOUBLE EDGE OVERLAP BLADE	2
10	BB21-16-24	BLADE BACK SPACER	4
11	BB25-16-26	BLADE BUSH	2
12	BB30-20-34	BLADE BUSH	2
13	1/2F	1/2" FINE NYLOC NUT	8
14	12x314FSKS	1/2"x3 1/4" FINE SOCKET HEAD 12.9	4
15	12x3FSKS	1/2"x3" FINE SOCKET HEAD 12.9	4
16	CW45215	DISC SPRING 45x21x5 (YELLOW)	4
17	D281421	DISC SPRING 28x14.2x1.0	4
18	DSW34	DISC SPRING 34x16.3x2	4
19	M16	M16 NYLOC NUT	2
20	M16x50BZP	M16x50 BOLT	2
21	M20	M20 NYLOC NUT	2
22	M20x70BZP	M20x70 BOLT	2
	*** - further breakdown provided**		

5 off *MJ30-920*

985-DCBLDHT3X-R (MJ30-920)

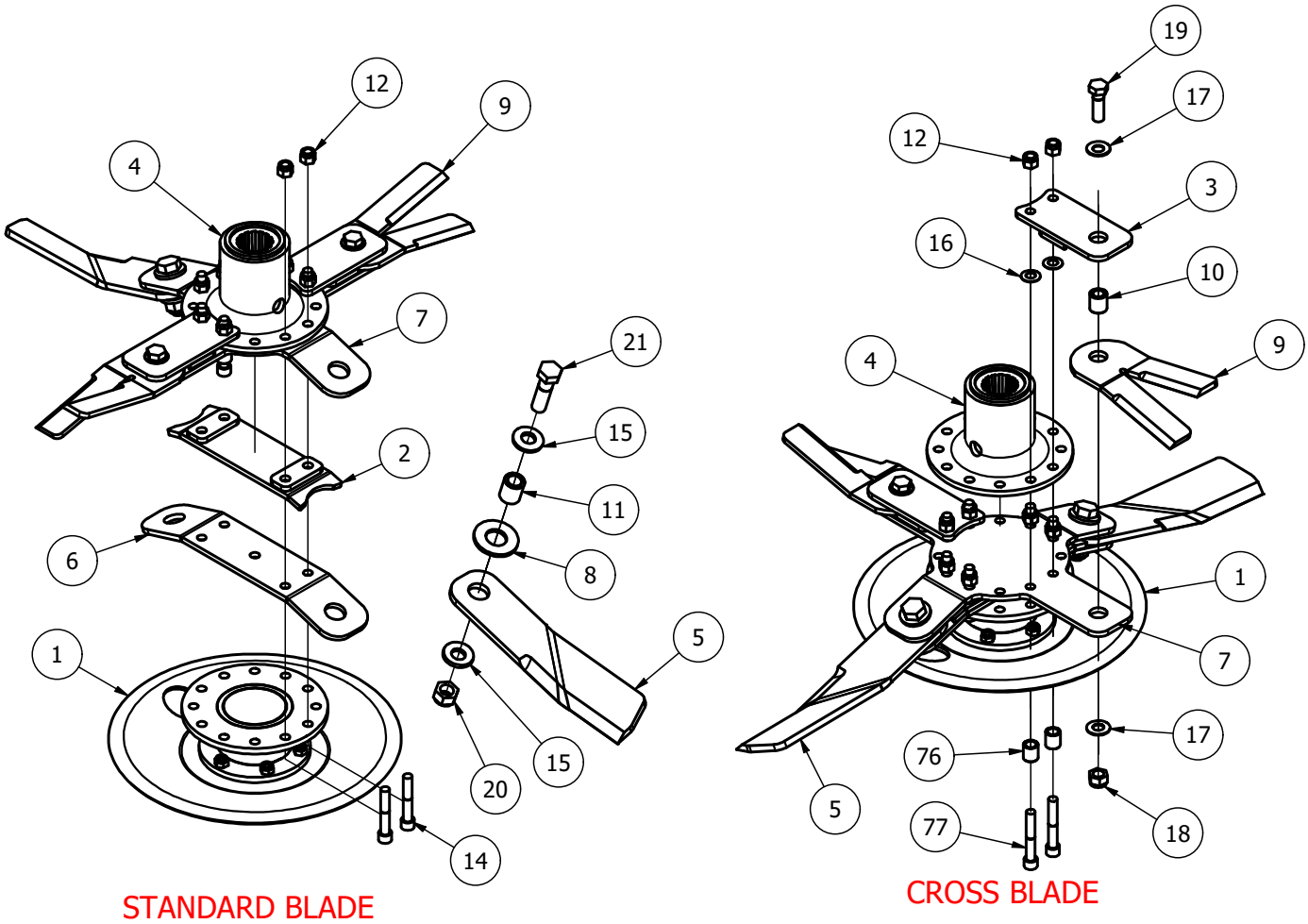

Item	Part No.	Description	Qty
1*	**USD-GA1**	**UNDERSOLE DISC ASSY**	**1**
2	BLDB-3000-STP3	BLADE STOP	1
3	BLDBXT-400-25A	BLADE STOP	2
4	909GT-BM01A	149 BLADE MOUNT	1
5	BLD-37030T-10C	Twist Blade 370xDia 30 (Clk)	2
6	BLDB-330-175	BLADE BACK (330 CTR 17.5 deg)	1
7	BLDBX-345-17	CROSS BLADE BACK (345 CTR 17.5 deg)	1
8	BLD-26030H-WSR5	HEAVY BLADE WASHER (DIA 31x5)	2
9	BLD-27025-OVL	DOUBLE EDGE OVERLAP BLADE	2
76	BB21-16-24	BLADE BACK SPACER	4
10	BB25-16-26	BLADE BUSH	2
11	BB30-20-34	BLADE BUSH	2
12	1/2F	1/2" FINE NYLOC NUT	8
77	12x314FSKS	1/2"x3 1/4" FINE SOCKET HEAD 12.9	4
14	12x3FSKS	1/2"x3" FINE SOCKET HEAD 12.9	4
15	CW45215	DISC SPRING 45x21x5 (YELLOW)	4
16	D281421	DISC SPRING 28x14.2x1.0	4
17	DSW34	DISC SPRING 34x16.3x2	4
18	M16	M16 NYLOC NUT	2
19	M16x50BZP	M16x50 BOLT	2
20	M20	M20 NYLOC NUT	2
21	M20x70BZP	M20x70 BOLT	2
23	SC509008	SEAL 50x90x08	1
	*** - further breakdown provided**		

5 off	*MJ30-920*

Spinning Undersole Disk Assembly (USD-GA1)

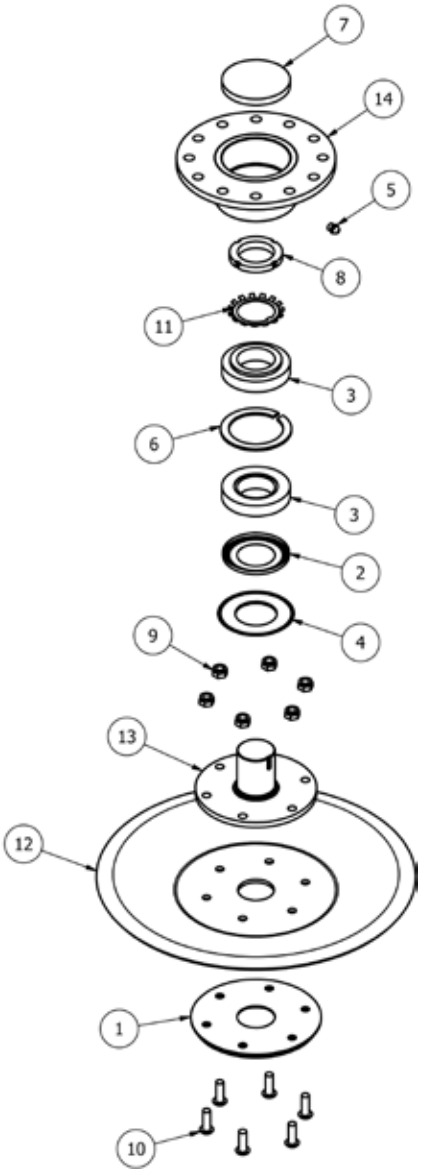

Item	Part No.	Description	Qty
1	USD-015	BOLT PROTECTOR	1
2	30210AV	NILOS RING 90x50	1
3	30210	TAPER BRG 90x50x21.75	2
4	5411001	DIA55xDIA100.5 WIPE SEAL	1
5	820	GREASE NIPPLE 1/8” STR	1
6	AGC3	DIA 90 INT CIRCLIP	1
7	DK90-10	DUST CAP 90x10	1
8	KM10	M50x1.5P LOCK NUT	1
9	M10	M10 NYLOC NUT	6
10	M10x30SKBH	M10x30 SK BTN HD 12.9	6
11	MB10	DIA 50mm LOCK TAB	1
12	USD-002	UNDERSOLE SAUCER	1
13	USD-003	BEARING SHAFT FAB	1
14	USD-010	BEARING HOUSING	1

PTO Shaft (607393)

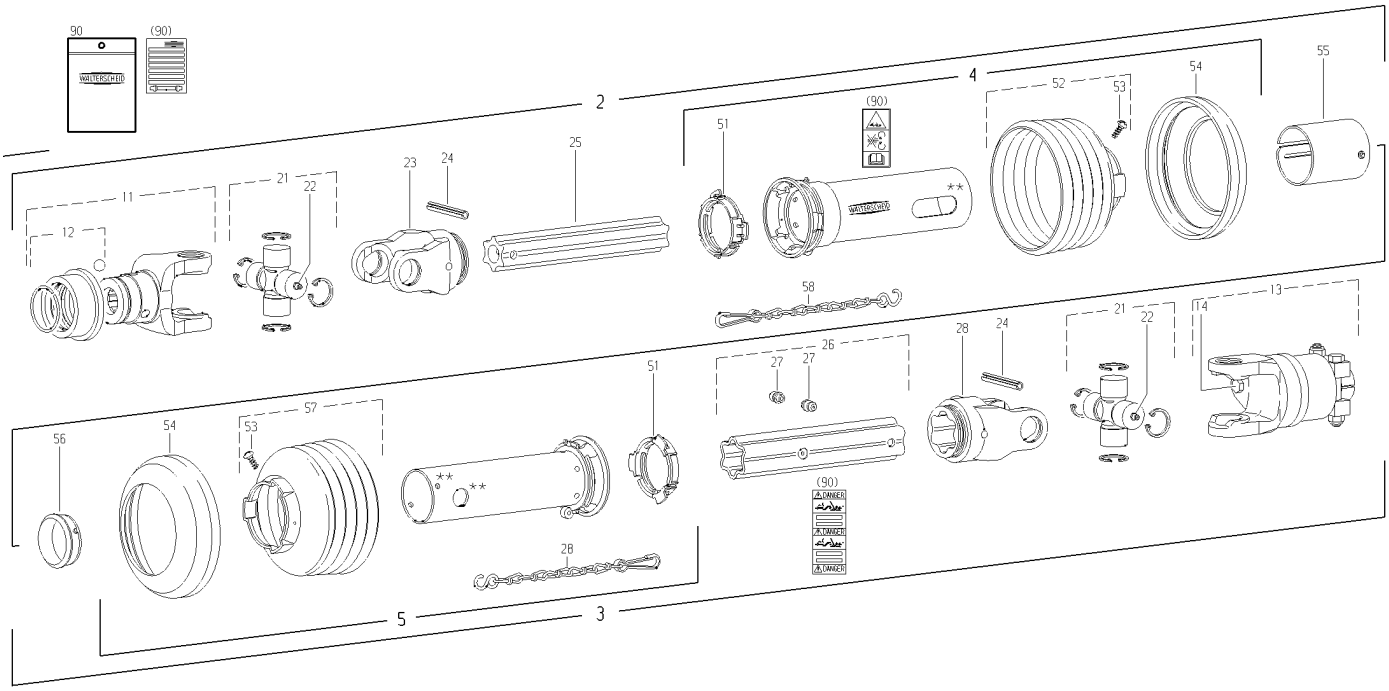

Item	Part No.	Description	Qty	
1	607393	PTO drive shaft with guard	1	W2600-SD351110-K64/24R
2		Inner PTO drive shaft half with	1	WH2600-SD35-1007
-		outer guard half		
3		Outer PTO drive shaft half with	1	WH2600-SD35-977-K64/24R
-		inner guard half		
4	116705	Outer guard half	1	SDH35-A1000-853608-K
-		Shorten SC tube by 160 mm		
-		Shorten SC cone by 1 rib(s)		
5	116452	Inner guard half	1	SDH35-J1000-853512-K
-		Shorten SC tube by 155 mm		
-		Shorten SC cone by 5 rib(s)		
-				
11	362436		1	ASG2600-1 3-4"(20)
12	364916	ASG-yoke complete	1	
13	152323	ASG-lock complete; size C	1	K64/24R-2600-1 3/4"(6)CC
		Key-type cut-out clutch;		M=2900Nm
-		right-hand rotation		
-				
21	116496	Cross and bearing kit complete	2	
22	153207	Drive-in type lubrication fitting	2	
23	168279	Inboard yoke	1	RG2600-S5
24	304578	Spring-type straight pin	2	ISO8752-13x95
25	691436	Plug	1	S5
26	135883	Profile tube; hardened	1	S5H-1000
-		Shorten tube by 60 mm		
27	101151	Profile tube with lubrication fitting	1	S6-910
28	380371	Drive-in type lubrication fitting	2	4,6
29	691440	Plug	1	S6
30	168278	Inboard yoke	1	RG2600-S6
-				
51	342315	Bearing ring	2	
52	170170	Guard cone; n= Number of ribs	1	n=RP8
-		Shorten SC cone by 1 rib(s)		
53	365305	Screw	2	4x10
54	178303	Reinforcing collar	1	
55	188061	Cover	1	
56	359609	Reinforcing collar	1	
57	365412	Guard cone; n= Number of ribs	1	n=RP12
-		Shorten SC cone by 5 rib(s)		
58	044321	Safety chain	2	
-				
90	118745	set of decals;	1	
-		Service instructions (West) with		
-		WARNING decal and DANGER decal		
91	117291	Prohibitive decal -	1	
-		high-pressure cleaner		
-				

T301B (301.058) (1.35) (SHORT)

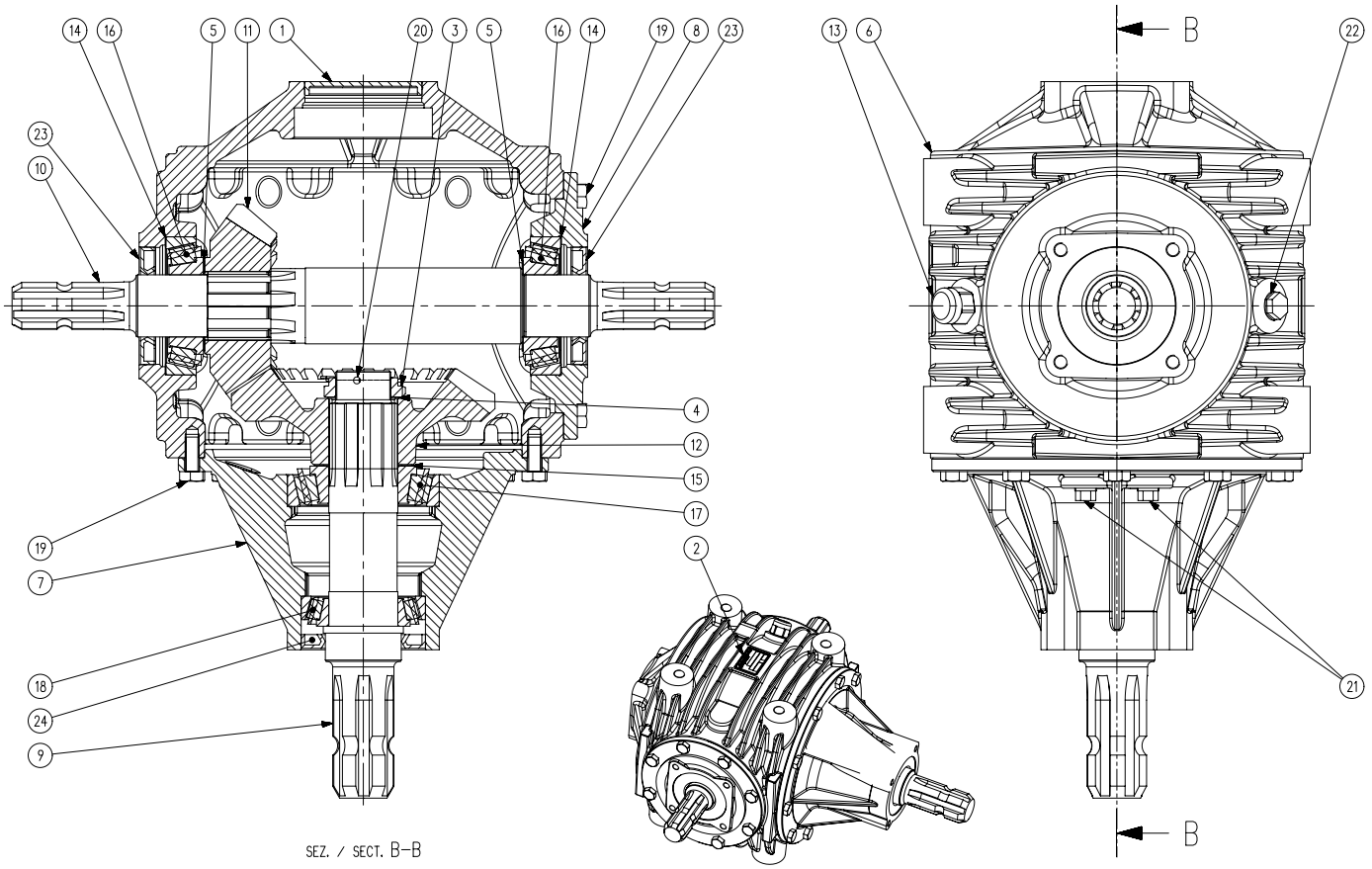

ITEM	PART NUMBER	DESCRIPTION	QTY
1	0.121.7101.00	CAP 85x10	1
2	0.124.7101.00	PLATE "COMER"	1
3	0.132.7107.00	CASTLE NUT M40X1.5	1
4	0.244.7510.00	SHIM 51.5x40.3x1.0	1
5	0.252.7500.00	SHIM KIT 45.3x65.3	2
6	0.301.0300.00	CASING	1
7	0.301.1300.00	EXTENSION	1
8	0.301.1302.00	COVER	1
9	0.301.2000.00	SHAFT 1"3/4 Z6	1
10	0.301.3004.00	SHAFT 1"3/8Z6	1
10	0.301.3004.00-S	SHAFT 1"3/8Z6 shortened	1
11	0.301.5001.00	PINION Z20 M7	1
12	0.301.6001.00	CROWN WHEEL Z27 M7	1
13	0.301.7101.00	PLUG 1/2"GAS	1
14	0.703.7500.00	SHIM KIT 85.3x99.7	2
15	0.712.7500.00	SHIM KIT 50.3x70.3	1
16	8.0.9.00107	TAPER ROLLER BEARING 30309	2
17	8.0.9.00268	TAPER ROLLER BEARING 30310	1
18	8.0.9.00469	TAPER ROLLER BEARING 30210	1
19	8.1.1.00061	BOLT HH M10x25 UNI5739 8.8	18
20	8.4.7.01112	COTTER PIN B4X60	1
21	8.6.5.00006	PLUG EXTERNAL 3/8"GAS	2
22	8.6.5.00203	PLUG 1/2"GAS	1
23	8.7.3.00331	OIL SEAL 45x85x10 NBR	2
24	8.7.3.01296	OIL SEAL 55X90X10	1

LF140T/1 (140.886) (140.881) (1)

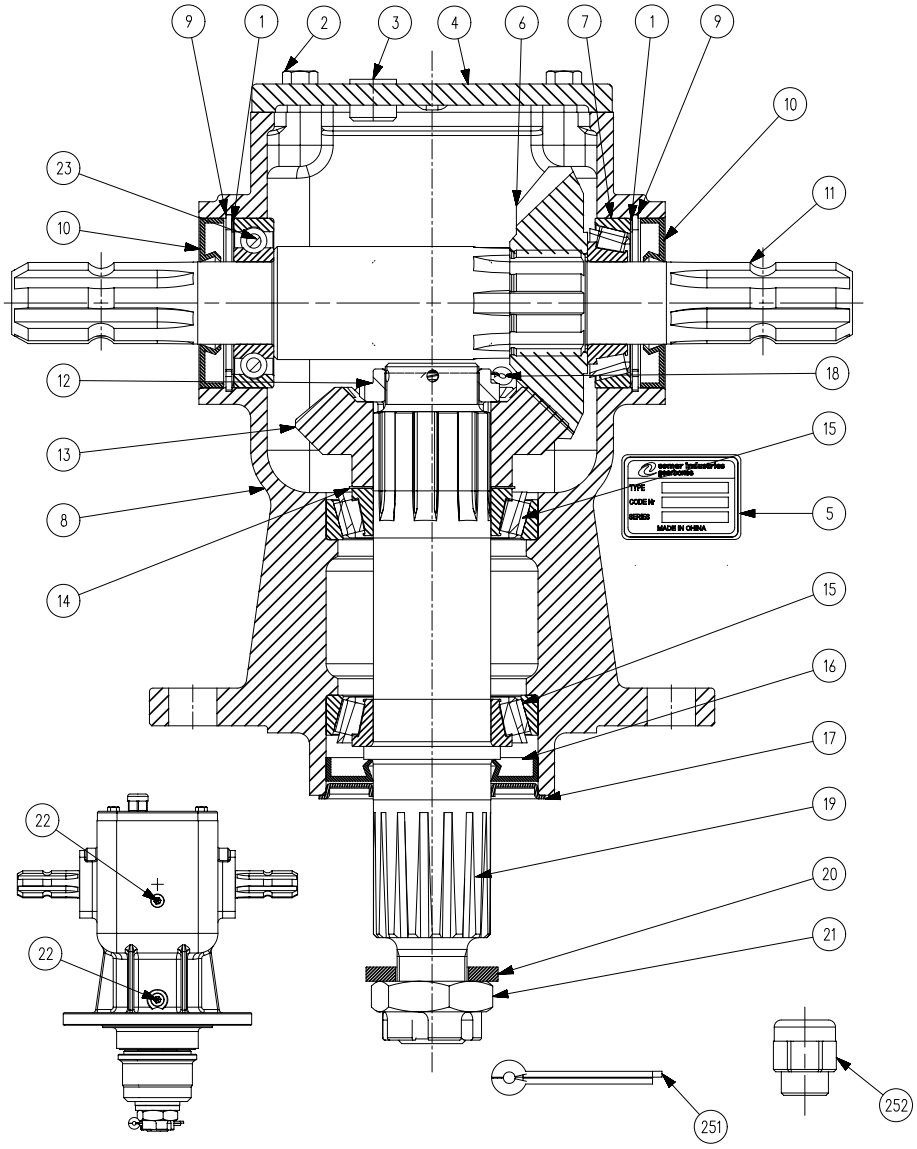

Item	Part No	Description	Qty
1	0.248.7500.00	SHIM KIT 60.3x71.7	2
2	8.1.1.00041	BOLT M8X22 8,8	4
3	8.6.6.00088	PLUG 1/2"GAS	1
4	0.140.1302.00	COVER	1
5	0.124.7135.00	NAME PLATE	1
6	0.132.5002.00	GEAR Z18 M6.15	1
7	8.0.9.00026	BEARING 30207	1
8	0.140.0303.00	CASING	1
9	8.5.2.00131	SNAP RING HOLE 72 UNI7437	2
10	8.7.1.00152	DUST LIP SEAL 35X72X10	2
11	0.140.2007.00	SHAFT 1" 3/8	1
12	0.132.7107.00	CASTLE NUT M40X1.5	1
13	0.132.6002.00	GEAR Z18 M6.15	1
14	0.712.7500.00	SHIM KIT 50.3x70.3	1
15	8.0.9.00469	TAPER ROLLER BEARING 30210	2
16	8.7.1.01107	DOUBLE LIP SEAL 50X90X10	1
17	0.139.7100.00	PROTECTIVE WASHER	1
18	8.4.7.01112	COTTER PIN B4X60	1
19	0.140.3003.00	SHAFT	1
20	0.139.7101.00	BLANK WASHER	1
21	0.140.7102.00	NUT M30X2	1
22	8.6.6.00201	PLUG 3/8"GAS	2
23	8.0.1.00870	BALL BEARING 6207	1
251	8.4.7.00146	COTTER PIN B6X60	1
252	8.6.7.00269	BREATHER PLUG 1/2"GAS	1

Notes:

All MAJOR machines must be registered when sold, to ensure that you receive the correct warranty cover and service bulletins. To register your machine for warranty, please go to the SALES & SUPPORT section of our website www.major-equipment.com and enter your details.

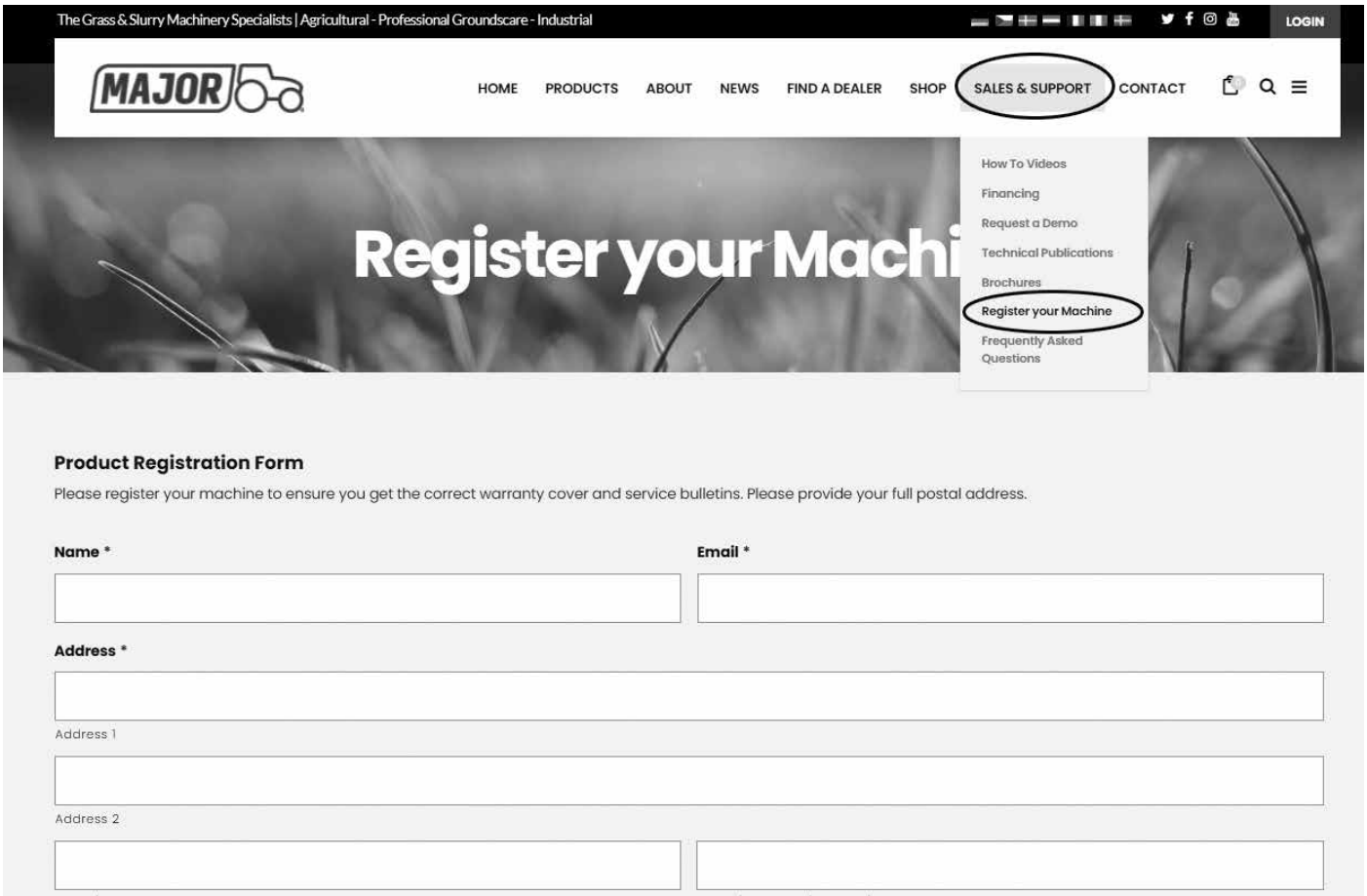

Get In Touch

Head Office
Major Equipment Intl Ltd
Ballyhaunis, Co. Mayo, F35 C891, Ireland
Tel: + 353 (0) 9496 30572
info@major-equipment.com

UK Office
Major Equipment Ltd
Major Ind. Estate, Heysham, Lancs, LA3 3JJ, UK
Tel: + 44 (0) 1524 850501
ukinfo@major-equipment.com

Netherlands Office
Major Equipment Intl Ltd (EU)
Postbus 29, NL-7700 AA Dedemsvaart, Nederland
Tel: + 31 (0) 6389 19585
euinfo@major-equipment.com

@MAJOREQUIPMENT

www.major-equipment.com